AUDIOVOX®
ELECTRONICS CORP.

# *LCD Color TV*

***with ATSC Tuner***

## Operating Manual

***FPE3706***

- *Before connecting, operating or adjusting this product, please read the manual completely. Please keep this manual for future reference.*
- *The illustrations and on-screen displays in this operation manual are for explanation purposes and may vary slightly from the actual operations.*
- *Menu items that are not selectable are grayed out.*
- ***FOR ASSISTANCE CALL 1-800-619-3848 OR VISIT US AT WWW.AUDIOVOX.COM.***

**1287617**

## WARNING

To reduce the risk of fire or electric shock, do not expose this apparatus to rain or moisture.

**CAUTION**

RISK OF ELECTRIC SHOCK
DO NOT OPEN

**CAUTION**-To reduce the risk of electric shock, do not perform any servicing other than that contained in the operating instructions unless you are qualified to do so.

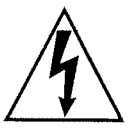

This symbol is intended to alert the user to the presence of uninsulated "dangerous voltage" within the product's enclosure that may be of sufficient magnitude to constitute a risk of electric shock to persons.

This symbol is intended to alert the user to the presence of important operating and maintenance (servicing) instructions in the literature accompanying the appliance.

This product utilizes tin-lead solder, and fluorescent lamp containing a small amount of mercury. Disposal of these materials may be regulated due to environmental considerations. For disposal or recycling information, please contact your local authorities or the Electronic Industries Alliance: www.eia.org

## FCC STATEMENT

This equipment has been tested and found to comply with the limits for a Class B digital device, pursuant to part 15 of the FCC Rules. These limits are designed to provide reasonable protection against harmful interference when the equipment is operated in a commercial environment.

This equipment generates, uses, and can radiate radio frequency energy and, if not installed and used in accordance with the instruction manual, may cause harmful interference to radio communications. Operation of this equipment in a residential area is likely to cause harmful interference in which case the user will be required to correct the interference at his own expense.

## FCC CAUTION:

**Pursuant to 47CFR, Part 15.21 of the FCC rules, any changes or modifications to this monitor not expressly approved by the manufacturer could cause harmful interference and would void the user's authority to operate this device.**

## WARNING:

**This is a CLASS B product. In a domestic environment this product may cause radio interference in which case the user may be required to take adequate measures to counter interference.**

## IMPORTANT SAFETY INSTRUCTIONS

1) Read these instructions.
2) Keep these instructions.
3) Heed all warnings.
4) Follow all instructions.
5) Do not use this apparatus near water. Apparatus shall not be exposed to dripping or splashing and no objects filled with liquids, such as vases, shall be placed on the apparatus.
6) Clean only with dry cloth.
7) Do not block any ventilation openings. Install in accordance with the manufacturer's instructions.
8) Do not install near any heat sources such as radiators, heat registers, stoves, or other apparatus (including amplifiers) that produce heat.

9) Do not defeat the safety purpose of the polarized or grounding-type plug. A polarized plug has two blades with one wider than the other. A grounding type plug has two blades and a third grounding prong. The wide blade or the third prong are provided for your safety. If the provided plug does not fit into your outlet, consult an electrician for replacement of the obsolete outlet.
10) Protect the power cord from being walked on or pinched particularly at plugs, convenience receptacles, and the point where they exit from the apparatus.
11) Only use attachments/accessories specified by the manufacturer.
12) Use only with the cart, stand, tripod, bracket, or table specified by the manufacturer, or sold with the apparatus.

When a cart is used, use caution when moving the cart/apparatus combination to avoid injury from tip-over.
13) Unplug this apparatus during lightning storms or when unused for long periods of time.
14) Refer all servicing to qualified service personnel. Servicing is required when the apparatus has been damaged in any way, such as power-supply cord or plug is damaged, liquid has been spilled or objects have fallen into the apparatus, the apparatus has been exposed to rain or moisture, does not operate normally, or has been dropped.

# Important Safeguards

Before using your TV, please read these instructions completely, and keep this manual for future reference. Carefully observe and comply with all warnings, cautions and instructions placed on the unit or described in the operating instructions or service manual.

### WARNING

To guard against injury, the following basic safety precautions should be observed in the installation, use and servicing of the unit.

### Power Sources

This unit should be operated only from the type of power source indicated on the information label.
If you are not sure of the type of electrical power supplied to your home, consult your dealer or local power company.

### Grounding or Polarization

This unit is equipped with a polarized AC power cord plug (a plug having one blade wider than the other), or with a three-wire grounding type plug (a plug having a third pin for grounding). Follow the instructions below:

**For the unit with a three-wire grounding type AC power cord plug (Class 1 unit)**

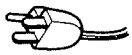

This unit must be connected to an AC power socket outlet with a protective earthing connection.

**For the unit with a polarized AC power cord plug**

This plug will fit into the power outlet only one way. This is a safety feature. If you are unable to insert the plug fully into the outlet, try reversing the plug.

If the plug still fails to fit, contact your electrician to have a suitable outlet installed. Do not defeat the safety purpose of the polarized plug by forcing it in.

### Wall outlet

Do not use a poor fitting outlet.
Insert the plug fully into the outlet. If it is loose, it may cause arcing and result in fire. Contact your electrician to have the outlet changed.

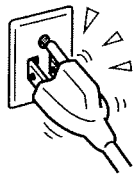

### Wiring

For your safety, unplug the AC power cord when wiring cables.

### Electric shock

Do not touch the AC power cord or the unit with a wet hand. If you plug/unplug the AC power cord from the unit with a wet hand, it may cause electric shock.
Never attempt to move the unit unless the AC power cord is disconnected.

### Cleaning

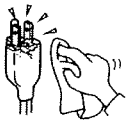

- Clean the AC power plug regularly.
- If the plug is covered with dust and it picks up moisture, its insulation may deteriorate and result in fire. Unplug the AC power plug and clean it regularly.
- Unplug the AC power cord when cleaning this unit. If not, it may result in electric shock.
- Clean the cabinet of the TV with a dry soft cloth. To remove dust from the screen, wipe it gently with a soft cloth.
- Stubborn stains may be removed with a cloth slightly dampened with a solution of mild soap and warm water. Never use strong solvents such as thinner or benzine for cleaning.
- If using a chemically pretreated cloth, please follow the instruction provided on the package.

### Overloading

Do not overload wall outlets, extension cords or convenience receptacles beyond their capacity, since this can result in fire or electric shock.

### Power

Always turn the unit off when it is not being used.
When the unit is left unattended and unused for long periods of time, unplug it from the wall outlet as a precaution against the possibility of an internal malfunction that could create a fire hazard.

### Sound

If a snapping or popping sound from the TV is continuous or frequent while the TV is operating, unplug the TV and consult your dealer or service technician. It is normal for TV's to make occasional snapping or popping sounds, particularly when being turned on or off.

### AC Power Cord

If you damage the AC power cord, it may result in fire or electric shock.

- Do not pinch, bend, or twist the cord excessively. The core lines may be bared and cut, and cause short-circuit, resulting in fire or electric shock.
- Do not convert or damage the AC power cord.
- Do not put anything heavy on the AC power cord. Do not pull the AC power cord.
- Keep the AC power cord away from heat sources.
- Be sure to grasp the plug when disconnecting the AC power cord. If the AC power cord is damaged, stop using it and replace with a new one.

### Ventilation

The slots and openings in the TV are provided for necessary ventilation. To ensure reliable operation of the unit, and to protect it from overheating, these slots and openings must never be blocked or covered. Unless proper ventilation is provided, the unit may gather dust and get dirty. For proper ventilation, observe the following:

- Do not install the unit turned backward or sideways.
- Do not install the unit turned over or upside down.
- Never cover the slots and openings with a cloth or other materials.
- Never block the slots and openings by placing the unit on a bed, sofa, rug or other similar surface.
- Never place the unit in a confined space, such as a bookcase or built-in cabinet, unless proper ventilation is provided.
- Leave some space around the unit. Otherwise, adequate air-circulation may be blocked causing overheating and cause fire or damage the unit.

### Heat sources

Do not install near any heat sources such as radiators, heat registers, stoves, or other apparatus (including amplifiers) that produce heat.

### Do not use this apparatus near water

For example, near a bathtub, washbowl, kitchen sink, or laundry tub, in a wet basement, or near a swimming pool, and the like.
Do not use immediately after moving from a low temperature to high temperature environment, as this causes condensation, which may result in fire, electric shock, or other hazards.
Apparatus shall not be exposed to dripping or splashing and no objects filled with liquids, such as vases, shall be placed on the apparatus.

### Entering of objects and liquids

Never insert an object into the product through vents or openings. High voltage flows in the product, and inserting an object can cause electric shock and/or short internal parts. For the same reason, do not spill water or liquid on the product.

### Lightning

Unplug this apparatus during lightning storms or when unused for long periods of time.
For added protection for this television equipment during a lightning storm, or when it is left unattended and unused for long periods of time, unplug it from the wall outlet and disconnect the antenna. This will prevent damage to the equipment due to lightning and power-line surges.

### Servicing

Refer all servicing to qualified service personnel. Servicing is required when the apparatus has been damaged in any way, such as power-supply cord or plug is damaged, liquid has been spilled or objects have fallen into the apparatus, the apparatus has been exposed to rain or moisture, does not operate normally, or has been dropped.

### Replacement parts

In case the product needs replacement parts, make sure that the service person uses replacement parts specified by the manufacturer, or those with the same characteristics and performance as the original parts. Use of unauthorized parts can result in fire, electric shock and/or other danger.

### Attachments

Only use attachments/accessories specified by the manufacturer. Do not use attachments not recommended by the manufacturer. Use of improper attachments can result in accidents.

### Damage requiring service

If any of the following conditions occurs, unplug the power cord from the AC outlet, and request a qualified service person to perform repairs.

a. When the power cord or plug is damaged.
b. When a liquid is spilled on the product or when objects have fallen into the product.
c. When the product has been exposed to rain or water.
d. When the product does not operate properly as described in the operating instructions.
   Do not touch the controls other than those described in the operating instructions. Improper adjustment of controls not described in the instructions can cause damage, which often requires extensive adjustment work by a qualified technician.
e. If the product has been dropped or the cabinet has been damaged in any way.
f. When the product displays an abnormal condition or exhibits a distinct change in performance. Any noticeable abnormality in the product indicates that the product needs servicing.

### Safety checks

Upon completion of service or repair work, request the service technician to perform safety checks to ensure that the product is in proper operating condition.

### Wall or ceiling mounting

When mounting the product on a wall or ceiling, be sure to install the product according to the method recommended by the manufacturer. This is a safety feature.

### Panel protection

The panel used in this product is made of glass. Therefore, it can break when the product is dropped or impacted upon by other objects. Be careful not to be injured by broken glass pieces in case the panel breaks.

### Pixel defect

The panel is a very high technology product, giving you finely detailed pictures. Occasionally, a few non-active pixels may appear on the screen as a fixed point of blue, green or red. Please note that this does not affect the performance of your product.

### Antennas
### Outdoor Antenna Grounding

If an outdoor antenna is installed, follow the precautions below. An outdoor antenna system should not be located in the vicinity of overhead power lines or other electric light or power circuits, or where it can come in contact with such power lines or circuits.

**WHEN INSTALLING AN OUTDOOR ANTENNA SYSTEM, EXTREME CARE SHOULD BE TAKEN TO KEEP FROM CONTACTING SUCH POWER LINES OR CIRCUITS AS CONTACT WITH THEM IS ALMOST INVARIABLY FATAL.**

Be sure the antenna system is grounded so as to provide some protection against voltage surges and built-up static charges.
Section 810 of the National Electrical Code (NEC) in USA and Section 54 of the Canadian Electrical Code in Canada provides information with respect to proper grounding of the mast and supporting structure, grounding of the lead-in wire to an antenna discharge unit, size of grounding conductors, location of antenna discharge unit, connection to grounding electrodes, and requirements for the grounding electrode.

**Antenna Grounding According to the National Electrical Code, ANSI/NFPA 70**

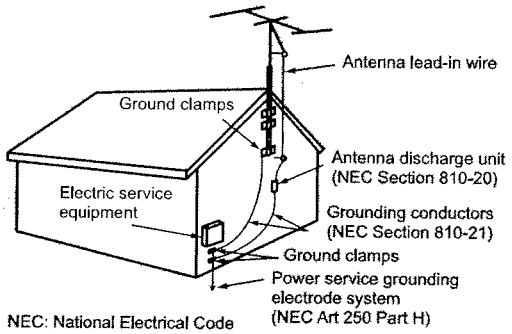

# Table of Contents


**Important Information** ..... 1
**Important Safeguards** ..... 2
**Table of Contents** ..... 4
**Introducing the TV** ..... 6
Remove the TV from the Box ..... 6
Installing the TV ..... 6
Carrying or Moving the TV ..... 6
Attach the Speaker to the Display ..... 7
Remove the Stand ..... 7
***TV Controls and Connectors*** ..... 8
Control Panel ..... 8
Connectors ..... 9
**Connecting the TV** ..... 10
***Basic Connections*** ..... 10
Overview ..... 10
Connecting Antenna System ..... 10
Connecting Cable System ..... 10
Connecting Cable Box ..... 11
Connecting Digital Cable Box ..... 11
Connecting Satellite Receiver ..... 12
Connecting Digital Satellite Receiver ..... 12
***Using External Equipment*** ..... 13
Introduction ..... 13
Equipment with HDMI Connection ..... 13
Equipment with DVI Connection ..... 14
Equipment with Coaxial Digital Audio ..... 14
Connecting a VCR for Playing Back ..... 15
Connecting a VCR for Recording ..... 15
Connecting a DVD Player with Component Video Connectors ..... 16
Connecting a DVD Player with S-Video and Audio Connectors ..... 16
Connecting a PC ..... 17
Connecting a Camcorder or "PlayStation" ..... 17
Connecting a Second TV or Monitor ..... 18
Connecting Headphones ..... 18
**Introducing the Remote Control** ..... 19
Insert Batteries into the Remote Control ..... 19
Using the Remote Control ..... 19
Button Descriptions ..... 20
**Getting Start** ..... 22
Running Initial Setup ..... 22
Setting a Secret Number ..... 23
Menu Navigation ..... 23
**Watching TV** ..... 24
Turning On/Off ..... 24
Introducing Channel Number ..... 24
Selecting Channels ..... 24
Adjusting Volume ..... 25
Using FREEZE button ..... 25
Using ZOOM button ..... 25

# Table of Contents


**Adjusting MENU Options** ..... 27
***Picture Control*** ..... 27
Accessing Picture Menu ..... 27
Selecting Picture Options ..... 27
Adjusting Picture Settings ..... 28
Adjusting Screen Settings ..... 28
***Audio Control*** ..... 29
Accessing Audio Menu ..... 29
Selecting Audio Options ..... 29
***Setting Channels*** ..... 30
Accessing Channels Menu ..... 30
Selecting Channel Options ..... 30
Setting Channel List ..... 30
Setting Favorite Channels ..... 31
Using the FAVORITE button ..... 31
Editing Channel Name ..... 31
***Using the Program Guide*** ..... 32
Accessing Program Guide ..... 32
Using the Program Guide ..... 32
***Setting System*** ..... 33
Accessing Settings Menu ..... 33
Setting Date & Time ..... 33
Setting Timer ..... 33
Input Select ..... 34
Setting Caption Vision ..... 34
Using the CCD button ..... 34
Setting Menu & Display ..... 34
Editing Input Labels ..... 35
Setting Screen Saver ..... 35
Running Reset System ..... 35
***Parental Lock Control*** ..... 36
Accessing Locks Menu ..... 36
Selecting Locks Options ..... 36
Viewing Locked or Blocked Programs ..... 37
**Other Information** ..... 38
Troubleshooting ..... 38
Care and Maintenance ..... 40
Specifications ..... 41
Programming your Remote Control ..... 42
Manufacturer's Codes ..... 44

# Introducing the TV

## *Remove the TV from the Box*

**STOP! To safely remove the television from the box It's best to use 2 people to remove the television for stability.**

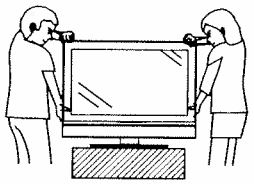

1. Remove cardboard holders from the box.
2. Remove the cardboard; however, keep the wrapping on the television to protect it while moving.
3. Lift onto installation location as the diagram illustrates.

## *Installing the TV*

**Select a steady platform with good ventilation to place the TV.**

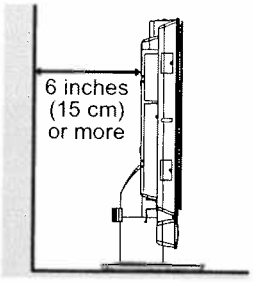


- Keep enough space above and behind the Display.
- The TV should be installed near an easily accessible power outlet.
- To prevent internal heat buildup, do not block the ventilation openings.
- Do not install the TV in a hot or humid place, or in a place subject to excessive dust or mechanical vibration.
- Be sure to take measures to prevent the TV from toppling over and causing injury.
- To obtain the best picture, do not expose the screen to direct illumination or direct sunlight. It is recommended to use spot lighting directed down from the ceiling or to cover the windows that face the screen with opaque drapery. It is desirable to install the TV in a room where the floor and walls are not of a reflective material.

### Cautions:

- Do not install the TV in protruding locations.
- Do not install this unit in restaurants where oily vapors occur. Dust absorbing oil may enter into the unit and damage the unit.
- Do not install this unit outdoors. If the unit is exposed to rain, it may result in fire or electric shock. If the unit is exposed to direct sunlight, the unit may heat up and cause damage to the unit.
- Do not install this unit in a vehicle or hang from the ceiling. Bumping of the vehicle may cause the unit to fall down and cause injury.
- Do not install this unit in a ship or vessel. If the unit is exposed to seawater, it may cause fire or damage the unit.
- If you install the unit on a non-level surface, the unit may fall or drop and cause injury or damage.
- If you place the unit on an unstable surface, the unit may fall and cause injury or damage.
- Do not hang anything on the unit. If you do so, the unit may fall from the stand or wall-mount bracket, causing damage or serious injury.

## *Carrying or Moving the TV*

- When you move the TV, carry it by two or more people.
- When you move the TV, hold the upper and bottom frames of the TV, not the speaker.
- As the glass surface of the TV has a special coating, be careful to avoid touching the glass surface as far as possible.
- When transporting, do not subject the unit to shocks or vibration, or excessive force.

## *Attach the Speaker to the Display*

- *The appearance of the unit may differ from the actual one.*
- *To deattach the speaker, perform the steps in reverse order.*

**Cautions:**

1. Carefully handle the unit during setup and consult authorized service personnel to ensure successful installation.
2. Before performing work spread cushion over the base area to lay the Display on. This will prevent it from being damaged.
3. Disconnect the AC power cord firstly.

Screw the Speaker and the Fixed board to the unit using the supplied screws and tighten securely, then install the two Connecting covers as the diagram illustrates.

Connect the speaker audio cable between the speaker terminals on the unit and the speaker matching polarity according to the terminals' color.

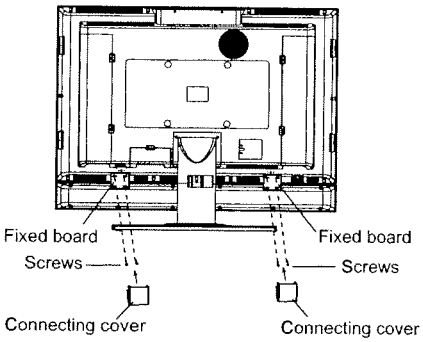


## *Remove the Stand*

**Cautions:**

1. Carefully handle the unit during setup and consult authorized service personnel to ensure successful installation.
2. Before performing work spread cushion over the base area to lay the Display on. This will prevent it from being damaged.
3. Disconnect the AC power cord firstly.

1

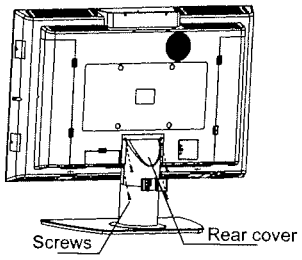


**Take off the rear cover.**

- *Do not remove the stand from the Display unless using an optional bracket to mount it.*
- *The appearance of the unit may differ from the actual one.*
- *To attach the stand, perform the steps in reverse order.*

2

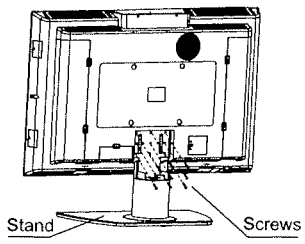


**Loosen the screws on the Stand to remove the Stand.**

3

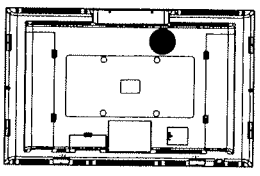

**Replace the rear cover**

# Introducing the TV

## TV Controls and Connectors

### Control Panel

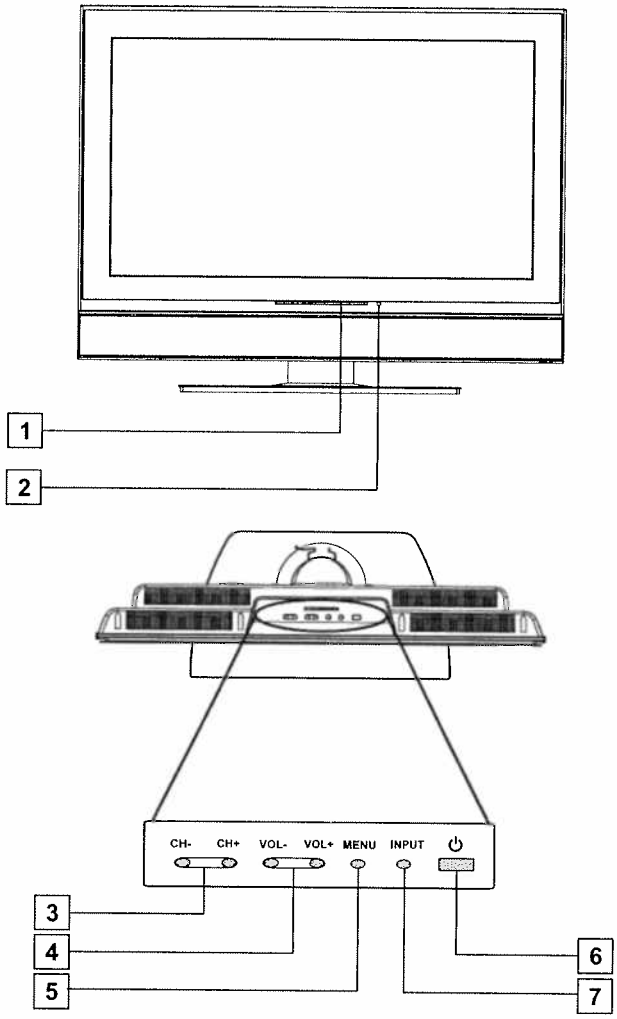


| Item | Description |
|---|---|
| 1 **Power Indicator** | |
| 2 **Remote Sensor** | Receives IR signals from the remote control. |
| 3 **CH-/CH+** | Press to scan through channels. In menu operations, these buttons serve as down/up buttons. |
| 4 **VOL-/VOL+** | Press to adjust the volume. In menu operations, these buttons serve as left/right buttons. |
| 5 **MENU** | To access the Menu main page. |
| 6 **POWER** ⏻ | Turn the unit on or off. |
| 7 **INPUT** | To display the INPUT source list or to quickly select input source. |

* In normal viewing, press the **MENU** button first time to access the Menu main page.
In Menu operations, the **MENU** button is used to confirm or alter the settings of the selected menu item, which means it has the same function with the **OK** button on the remote control unit.

## TV Controls and Connectors

### Connectors

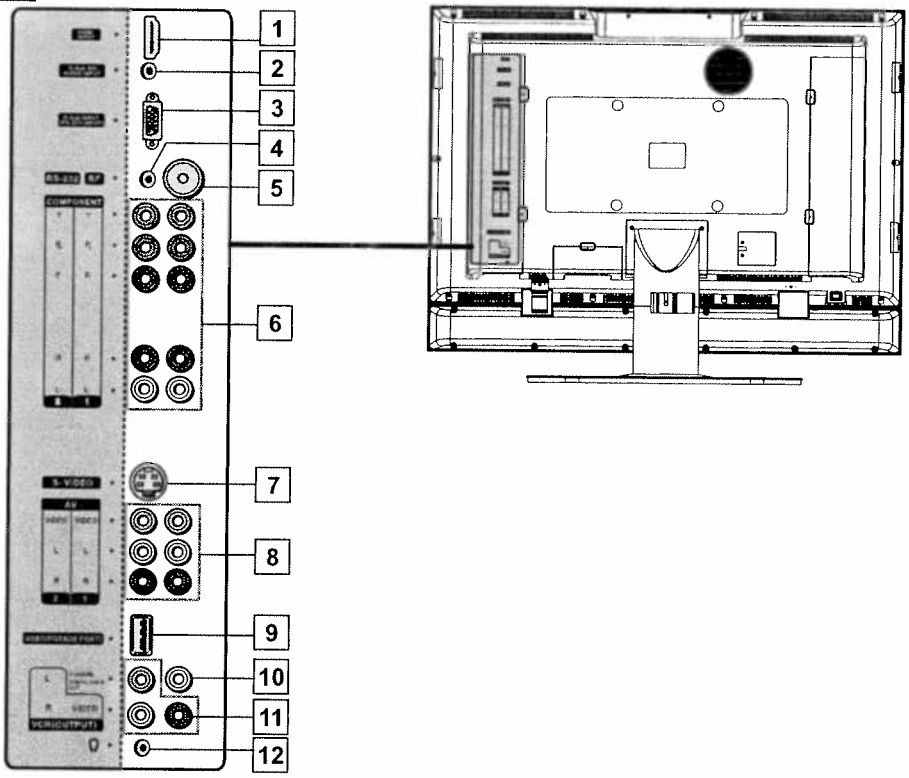


| Item | Description |
|---|---|
| 1 HDMI IN | HDMI (High-Definition Multimedia Interface) provides an uncompressed, all-digital audio/video interface between this TV and any HDMI-equipped audio/video component, such as a set-top box and DVD player. HDMI supports enhanced, or high-definition video, plus two-channel digital audio. |
| 2 Audio IN for DVI or D-Sub interface | Use this audio input when you are using DVI connection or D-Sub connection. A HDMI-to-DVI adapter is necessary when you are connecting a DVI-equipped device to this TV |
| 3 D-Sub IN | Connects to a PC or other Analog RGB devices such as Video Conferencing or Set-top Boxes. |
| 4 RS-232 terminal | For service only. The user should not use this terminal. |
| 5 RF IN | RF input that connects to your cable system or outdoor antenna. |
| 6 Component Video IN ½ / Audio IN | Connect to your DVD player's or digital set-top box's component video (YPbPr) and audio (L/R) jacks. Component video provides better picture quality than the S-VIDEO or the composite video connections. |
| 7 S-VIDEO input | Connects to the S-VIDEO output jack of your VCR or other video equipment that has S-VIDEO. S VIDEO provides better picture quality than the composite video connection. |
| 8 Composite Video IN ½ /Audio IN | Connect to the composite video and audio output jacks on your VCR or other video device. |
| 9 USB Port | For service only. The user should not use this port. |
| 10 Coaxial Digital Audio OUT | Connects to the digital audio input of a digital audio component. |
| 11 Video/Audio OUT | Connects to your VCR to record programs as desired or connects to hook up a second TV or monitor. **Only analog TV programs, AV1 and AV2 input sources can be output through the AV output jacks.** |
| 12 Headphones jack | Connects to your headphones. If your headphones do not match the jack, use a suitable plug adaptor (not supplied). |

# Connecting the TV

## Basic Connections

### Overview

To display clear crisp pictures, you must connect your TV correctly and choose the correct display format. It is strongly recommended to connect the cable and antenna input using a 75-ohm coaxial cable to receive optimum picture quality signal. A 300-ohm twin lead cable can be easily affected by radio noise and the like, resulting in signal deterioration. If you use a 300-ohm twin lead cable, keep it as far away as possible from the TV.
The way in which you connect your TV will vary, depending on how your home receives a signal (antenna and satellite; cable and cable box).
Do not use an indoor antenna, which is especially susceptible to radio noise.

**Disconnect all power sources before making any connections.**

### Connecting Antenna System

For best results, use this connection if you have an antenna system.

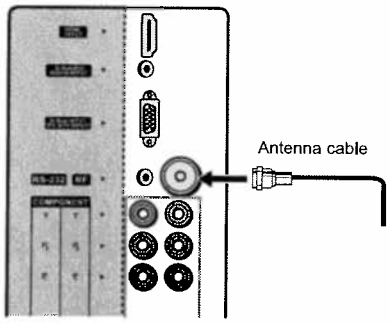


*Be sure to choose [Antenna] before you start Auto Program. See chapter [Getting Start] for details.*

### Connecting Cable System

For best results, use this connection if you have a cable system.

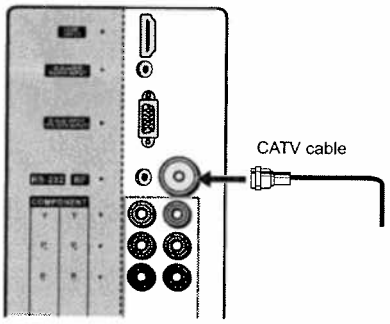


*Be sure to choose [Cable] before you start Auto Program. See chapter [Getting Start] for details.*

## Basic Connections

### Connecting Cable Box

For best results, use this connection if you have a cable system and your cable company scrambles some channels, such as premium channels or all channels (which requires you to use a cable box).
Connect the CATV cable to the cable box's input jack. Then use a coaxial cable to connect the cable box's output jack to the TV's RF input jack.

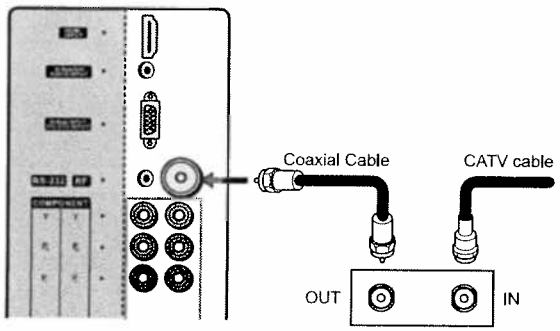


**Cable box**

*Be sure to choose [Cable] before you start Auto Program. See chapter [Getting Start] for details.*

### Connecting Digital Cable Box

Connect the RF coaxial cable from the CATV to the input of the digital cable box.
Use a component video cable to connect the YPbPr jacks of your digital cable box to the TV's component jacks.
Component video connection is necessary to view digital broadcastings in 1080i, 720p, 480i and 480p. This TV displays most format types of picture.
The component Jacks do not provide audio, so audio cables must be connected to provide sound.

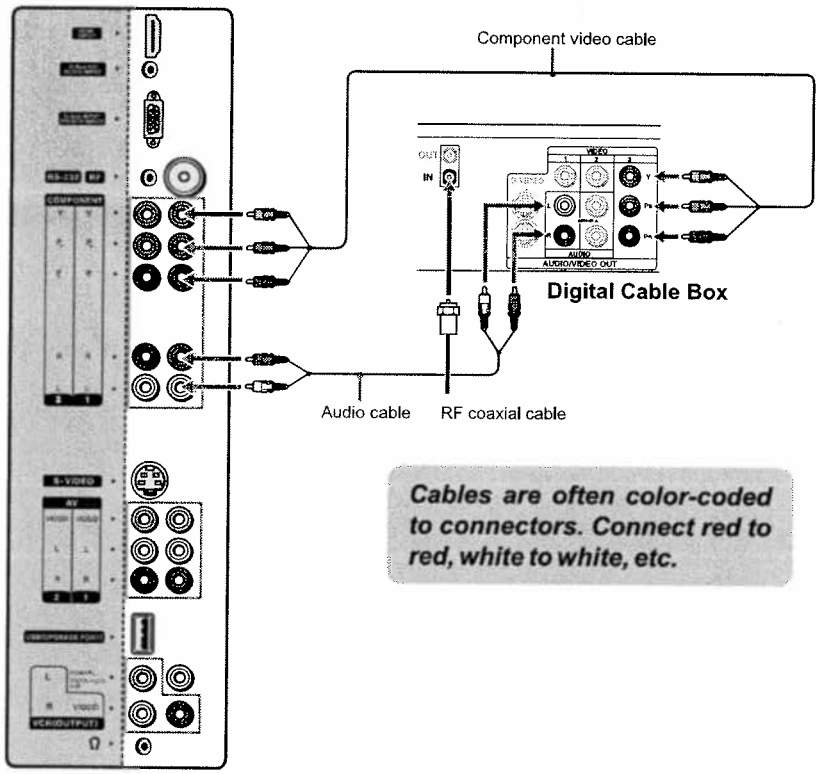


***Cables are often color-coded to connectors. Connect red to red, white to white, etc.***

# Connecting the TV

## Basic Connections

### Connecting Satellite Receiver

Connect the satellite antenna cable to the satellite receiver's SATELLITE IN jack. Use AV cables to connect the satellite receiver's AUDIO and VIDEO OUT jacks to the TV's AUDIO and VIDEO IN jacks.

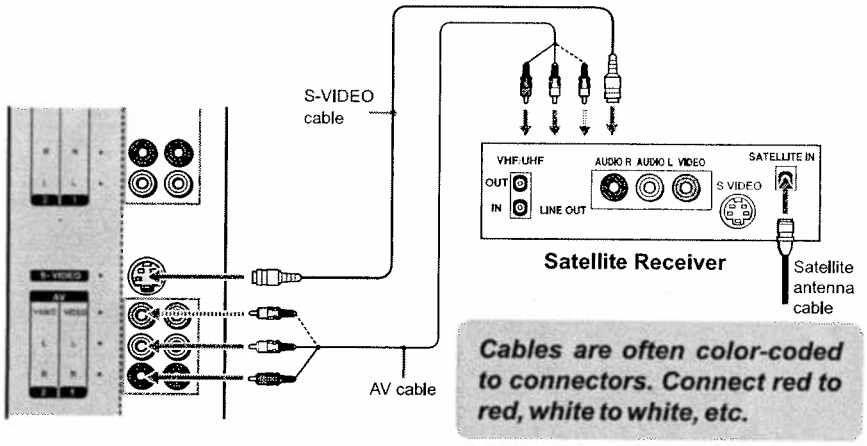


*If your* satellite receiver *is not equipped with S-VIDEO, use a VIDEO cable (yellow) instead of the S-VIDEO cable.*

### Connecting Digital Satellite Receiver

Connect the RF coaxial cable from the satellite dish to the input of the digital satellite receiver.
Use a component video cable to connect the YPbPr jacks of your digital satellite receiver to the TV's component jacks.
Component video connection is necessary to view digital broadcastings in 1080i, 720p, 480i and 480p. This TV displays most format types of picture.
The component Jacks do not provide audio, so audio cables must be connected to provide sound.

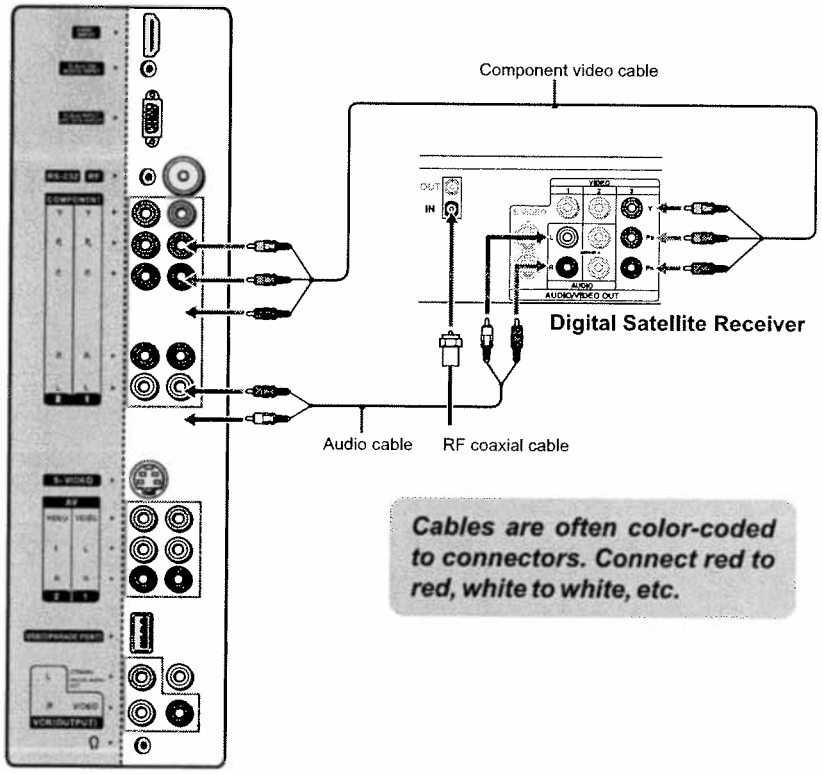

## Using External Equipment

### Introduction

You can connect many types of external equipment to your TV, like a DVD player, VCR, Digital TV tuner, PC, HDMI equipment, game console and camcorder. To view external source images, select the input source from **INPUT** on the remote control unit or on the Display.

#### *Notes and Cautions:*

- **Disconnect all power sources before making any connections.**
- Carefully check the terminals for position and type before making any connections.
- The packing contents of this TV may not include the cables or adaptors mentioned in this chapter.
- Refer to your external equipment operation manual carefully before making connections.
- Loose connectors can result in image or color problems. Make sure that all connectors are securely inserted into their terminals.
- Refer to your external equipment operation manual for the signal type.
- The illustration of the external equipment may be different depending on your model.

### Equipment with HDMI Connection

For best results, use this connection if your equipment has a High-Definition Multimedia Interface (HDMI).
Use a HDMI cable, connect the equipment's HDMI OUT jack to the TV's HDMI IN jack.

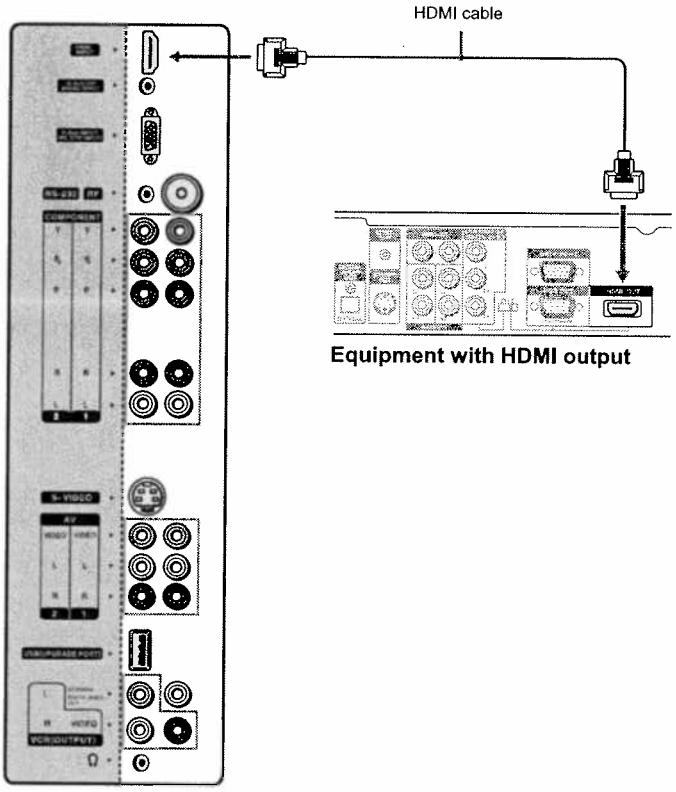


**Equipment with HDMI output**

*The HDMI jack provides both video and audio signals, so it is not necessary to connect the audio cable.*

## Using External Equipment

### Equipment with DVI Connection

If you are connecting equipment with DVI connector to this TV, you will need to use an adapter. You can use a commercial HDMI-to-DVI cable or an HDMI adapter. Both are available at your local electronics store. When you use the adapter, you will also need to use separate audio cables for sound as DVI connector is for video signals only.

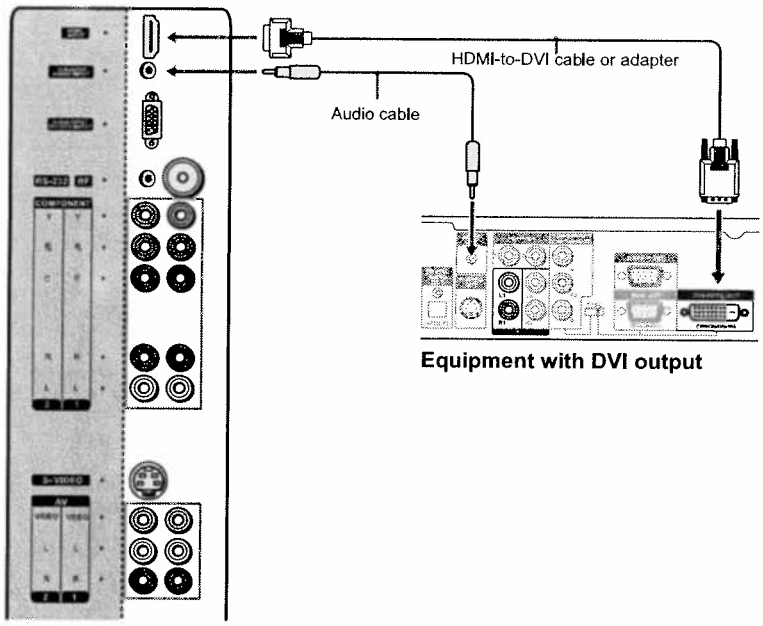


**Equipment with DVI output**

### Equipment with Coaxial Digital Audio

You can use the TV's Coaxial Digital Audio OUT jack to connect a digital audio device, such as an audio amplifier.
Use an coaxial audio cable to connect the TV's Coaxial Digital Audio OUT jack to the device's Coaxial Digital Audio IN jack.

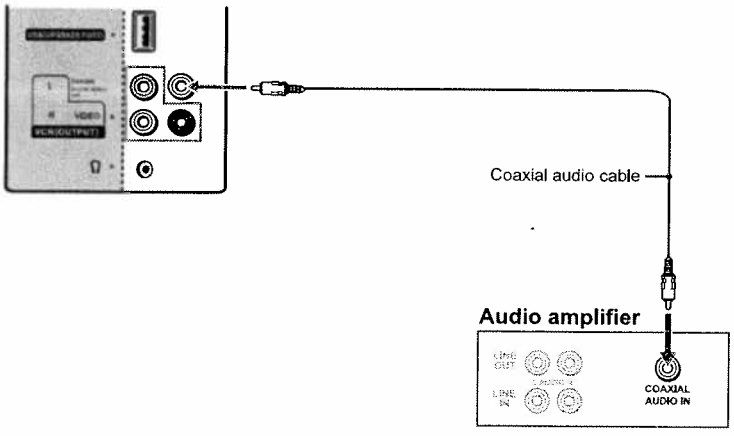


*The Digital Audio OUT jack is available only when a digital TV channel is received.*

## Using External Equipment

### Connecting a VCR for Playing Back

Use AV cables to connect the VCR's AV output jacks to the TV's AV input jacks.
If your VCRs have S-VIDEO jacks, for best picture quality, use an S-VIDEO connection instead of the video cable (yellow) on your combined A/V cable.
Use a S-VIDEO cable to connect the VCR's S-VIDEO OUT jack to the TV's S-VIDEO IN jack. S-VIDEO does not provide audio, so audio cables must be connected to provide sound.

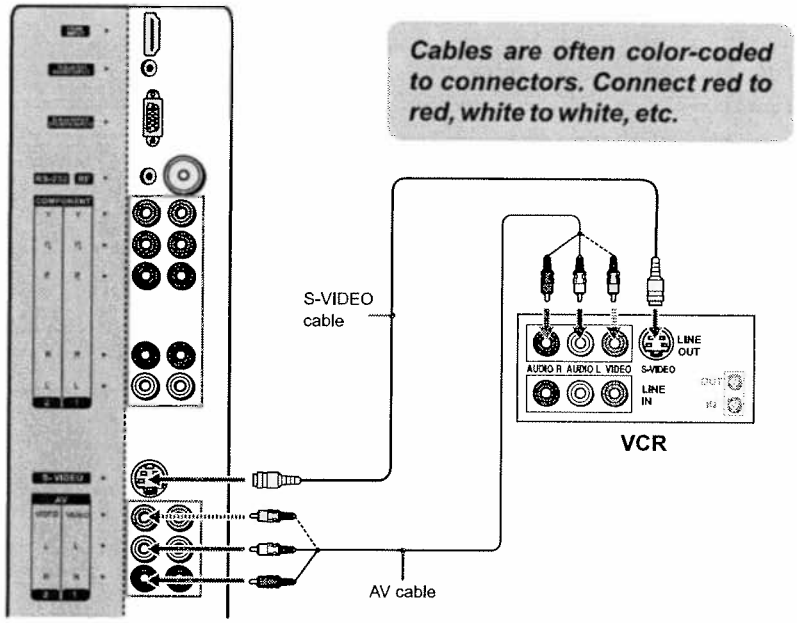


*The S-video terminal share the same audio jacks with video2 and has priority over the video2 jack.*

### Connecting a VCR for Recording

Use AV cables to connect the VCR's AV input jacks to the TV's VCR output jacks.

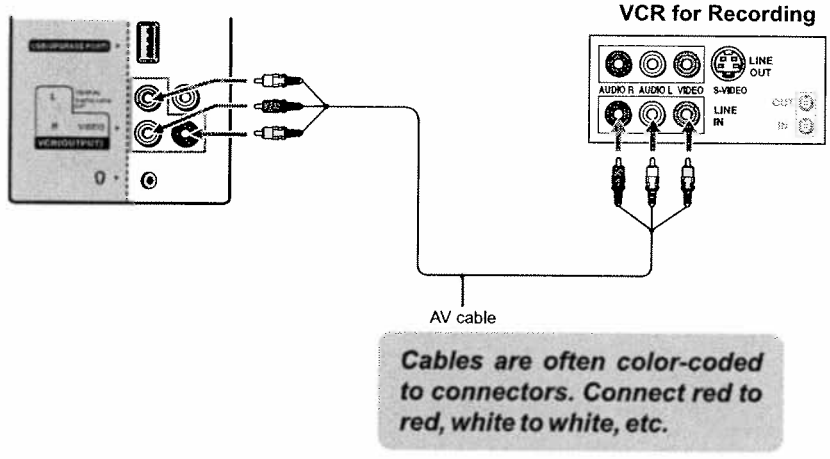


*Only analog TV programs, AV1 and AV2 input sources can be output through the AV output jacks.*

## Using External Equipment

### Connecting a DVD Player with Component Video Connectors

Use a component video cable to connect the DVD player's YPbPr jacks to the TV's YPbPr jacks.
Use an audio cable to connect the DVD player's AUDIO OUT jacks to the TV's AUDIO IN jacks. Be sure to use the same row of inputs that you used for the video connection.

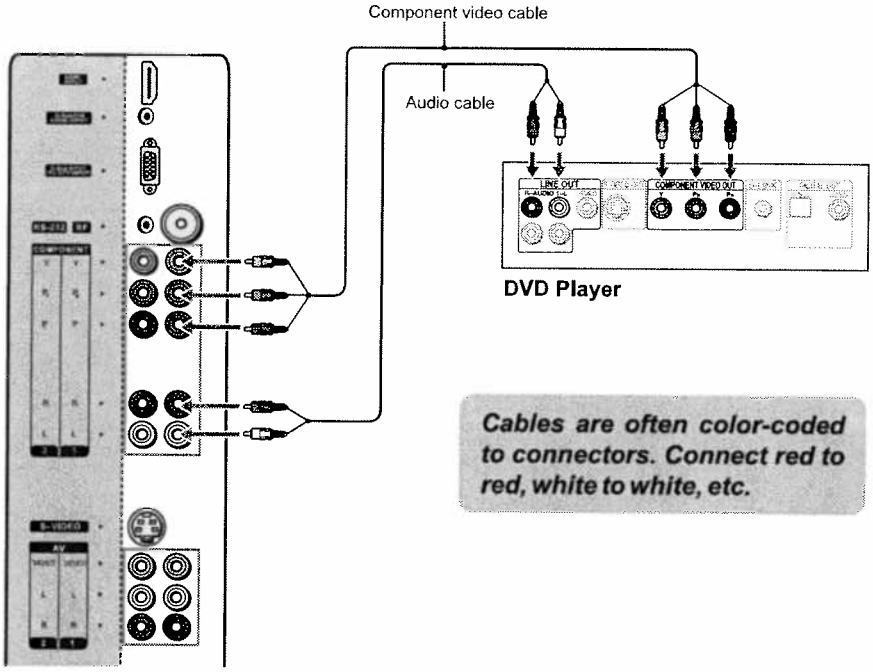


*The YPbPr jacks on your DVD player are sometimes labeled YCbCr, or Y, B-Y and R-Y. If so, connect the cables to like colors.*

### Connecting a DVD Player with S-Video and Audio Connectors

Use an AV cable to connect the DVD player's AUDIO OUT jacks to the TV's AUDIO IN jacks.
Use a S-VIDEO cable to connect the DVD player's S-VIDEO OUT jack to the TV's S-VIDEO IN jack.

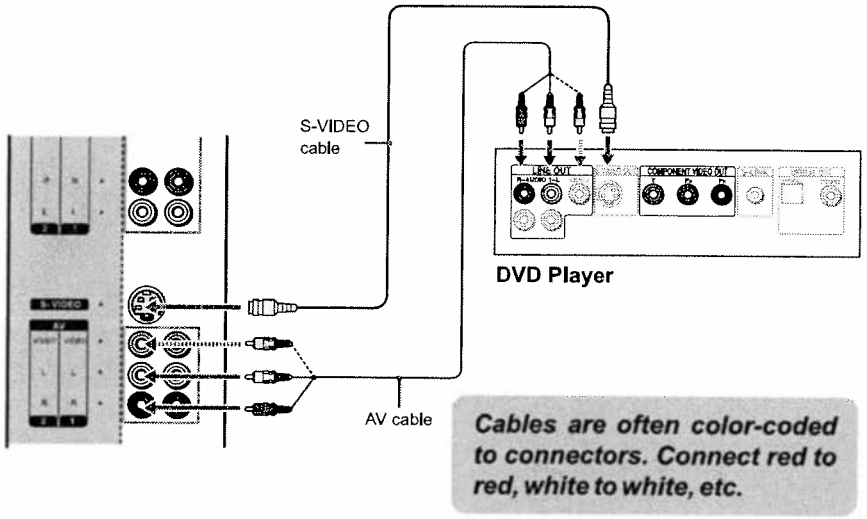


*If your DVD player is not equipped with S-VIDEO, use a VIDEO cable (yellow) instead of the S-VIDEO cable.*

## Using External Equipment

### Connecting a PC

If you connect your PC to the TV, you can watch your personal computer's display on the TV.
When your PC is connected to the TV with the D-Sub cable and audio cable, you can view and listen to the PC's video and audio output on the TV.

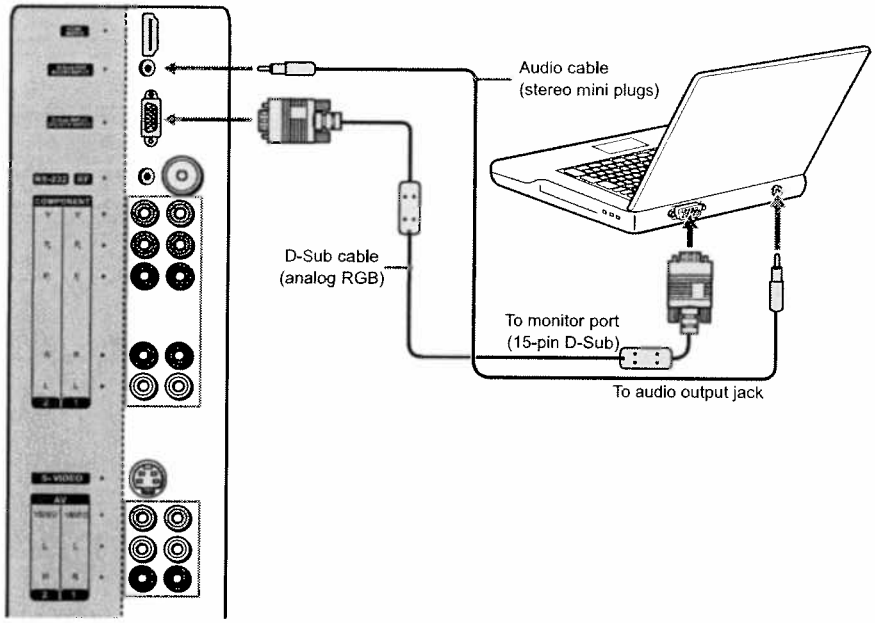


### Connecting a Camcorder or "PlayStation"

Use an AV cable to connect the camcorder or "PlayStation" AV output jacks to the TV's AV input jacks.

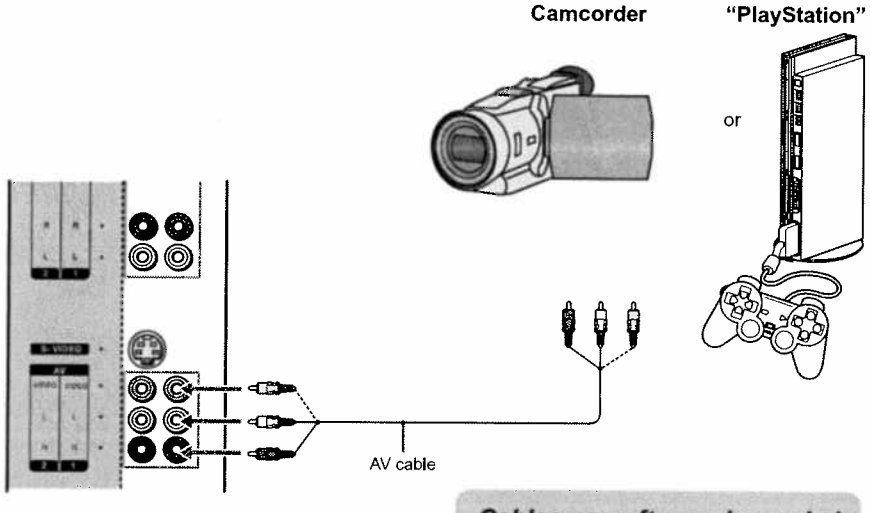


***Cables are often color-coded to connectors. Connect red to red, white to white, etc.***

# Connecting the TV

## *Using External Equipment*

### *Connecting a Second TV or Monitor*

The TV has a special signal output capability which allows you to hook up a second TV or monitor.
Connect the second TV or monitor to the TV's VCR output jacks.
See the Operating Manual of the second TV or monitor for further details regarding that device's input settings.

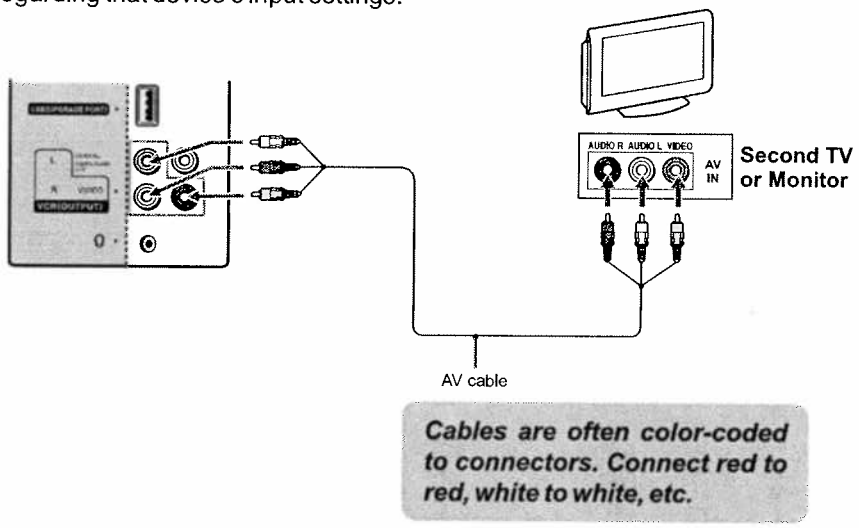


*Only analog TV programs, AV1and AV2 input sources can be output through the AV output jacks.*

### *Connecting Headphones*

Insert the plug of the headphone into the TV's Headphone jack.
When using headphones, adjust the headphone volume so as to avoid excessive levels, as hearing damage may result.

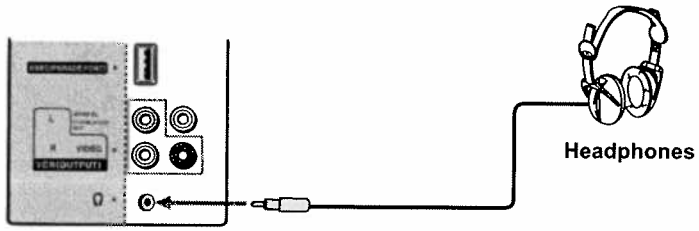


*If your headphones do not match the jack, use a suitable plug adaptor.*

## *Insert Batteries into the Remote Control*

Insert two size AA batteries by matching the ⊕ and ⊖ on the batteries to the diagram inside the battery compartment.

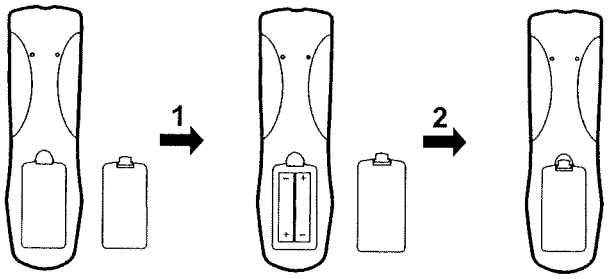


**Precaution on battery use**

Improper use of batteries can result in a leakage of chemicals and/or explosion. Be sure to follow the instructions below.

- Place batteries with their terminals corresponding to the (+) and (–) indications.
- Different types of batteries have different characteristics. Do not mix batteries of different types.
- Do not mix old and new batteries. Mixing old and new batteries can shorten the life of new batteries and/or cause old batteries to leak chemicals.
- Remove batteries as soon as they are non-operable. Chemicals that leak from batteries can cause a rash. If chemical leakage is found, wipe with a cloth.
- The batteries supplied with the product may have a shorter life expectancy due to storage conditions.
- If the remote control is not used for an extended period of time, remove the batteries from the remote control.

## *Using the Remote Control*

Use the remote control by pointing it towards the remote sensor window of the set. Objects between the remote control and sensor window may prevent proper operation.

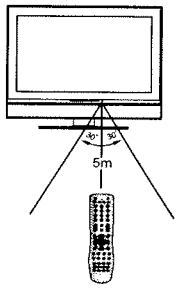


**Cautions regarding use of remote control**

- Do not expose the remote control to shock. In addition, do not expose the remote control to liquids, and do not place in an area with high humidity.
- Do not install or place the remote control under direct sunlight. The heat may cause deformation of the unit.
- The remote control may not work properly if the remote sensor window of the main unit is under direct sunlight or strong lighting. In such a case, change the angle of the lighting or TV set, or operate the remote control closer to the remote sensor window.

*This above illustration is for reference only. The remote sensor may be in different locations on different models.*

# Introducing the Remote Control

## *Button Descriptions*

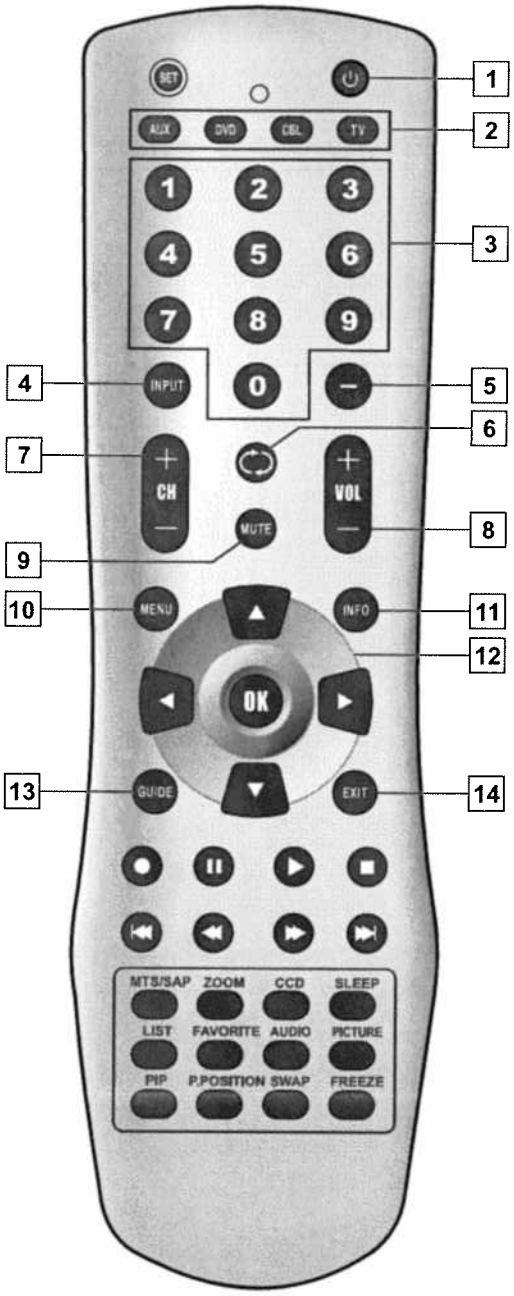


| Button | Description |
|---|---|
| 1 **POWER** ⏻ | Turn the unit on or off. |
| 2 **AUX, DVD, CBL, TV** | To select additional products to be controlled with remote control.<br>*This remote control is an universal remote control. If your remote control does not work correctly when you operate the unit, please try to press TV button.* |
| 3 **0-9 number buttons** | Use these number buttons to select channel or input password. |
| 4 **INPUT** | To display the INPUT source list or to quickly select input source. |
| 5 **Dash (-)** | To enter a program number for multiple program channels such as 2-1,2-2, etc. |
| 6 **FLASHBACK** | To switch between the currently tuned channel and the previously tuned channel. |
| 7 **CH+, CH-** | To select channels upward or downward. |
| 8 **VOL+, VOL-** | To adjust volume. |
| 9 **MUTE** | To mute the sound. |
| 10 **MENU** | To access the Menu main page. |
| 11 **INFO** | To access the program guide. |
| 12 **▲,▼,** | To move upward or downward in menu operation; |
| **◄, ►,** | To move left or right in menu operation;<br>To adjust selected menu item in menu operation; |
| **OK** | To confirm or alter the settings of the selected menu item. |
| 13 **GUIDE** | To access the program guide. |
| 14 **EXIT** | To exit menu. |

## Button Descriptions

| Button | Description |
|---|---|
| 15 ZOOM | To select a screen aspect ratio. |
| 16 CCD | To select closed caption mode. |
| 17 MTS/SAP | To select a stereo, sap or mono for analog channels; also used to select audio track for digital channels. |
| 18 SLEEP | To set sleep timer. |
| 19 LIST | To access the master channel list. |
| 20 PICTURE | To select a preset picture mode. |
| 21 FREEZE | To freeze current picture. |
| 22 FAVORITE | To access the favorite channel list and select from 3 different favorite lists. |
| 23 AUDIO | To select a preset sound mode. |

# Getting Start

## *Running Initial Setup*

Perform the following steps before you press **POWER** ⏻ on the remote control to turn on your TV set.

1. Insert the batteries into the remote control unit.
2. Connect the antenna cable to the TV.
3. Plug in the AC power cord to the AC outlet.

After you finish connecting the TV, you can run the Initial Setup to create a list of available analog and digital channels. The Initial Setup screen appears when you turn on the TV for the first time after purchase. We strongly recommend you to perform initial setup according to the steps below.

## *Setting Language*

Press ▲/▼ to select the desired language listed on the screen, and then press OK to confirm and continue.

## *Setting Time Zone*

Press ▲/▼ to select a proper time zone according to your area, and then press OK to confirm and continue.

If you want to return to previous screen, please highlight [GO BACK] item and press OK to return.

## *Setting Daylight Saving*

Press ▲/▼ to highlight [Yes] item if you want to observe daylight saving, or you may select [No] to abandon daylight saving and then press OK to confirm and continue.

If you want to return to previous screen, please highlight [GO BACK] item and press OK to return.

## *Selecting RF Input Source*

Press ▲/▼ to select [Antenna] or [Cable] according to what kind of connection is made with your TV, and then press OK to confirm and continue.

If you choose [Antenna], the TV starts Auto Program automatically.

If you choose [Cable], there are 3 kinds of CATV system, including STD, HRC and IRC. Select the one matches to your TV. Select [Automatic] when you do not know which one to select. When you select [Automatic], the unit automatically detects the type of your cable system. If the unit fails to detect the type of your cable system, please consult with your cable TV company about the type of your cable system, and then choose the correct type before Auto Program.

If you want to return to previous screen, please highlight [GO BACK] item and press OK to return.

## *Start Auto Program...*

Once you have finished selecting RF input source, the unit starts auto program.

Auto Program may take a while to complete. A progress bar is displayed while available channels are being scanned. If you select [Stop Scan] to cancel the Auto Program before all receivable channels are scanned, you need to run Auto Program at a later time.

Auto Program will create a list of receivable channels for the current input . You will be required to run Auto Program for RF input to create a list of available channels.

**(Example)**

## *Setting a Secret Number*

For additional protection to your TV and the user's settings from being accidentally changed, we recommend you to set a secret number firstly as below.

1. Press **MENU**.....

2. Highlight [**Locks**].....

   *Use ▲ or ▼ button.*

3. Press **OK**.....

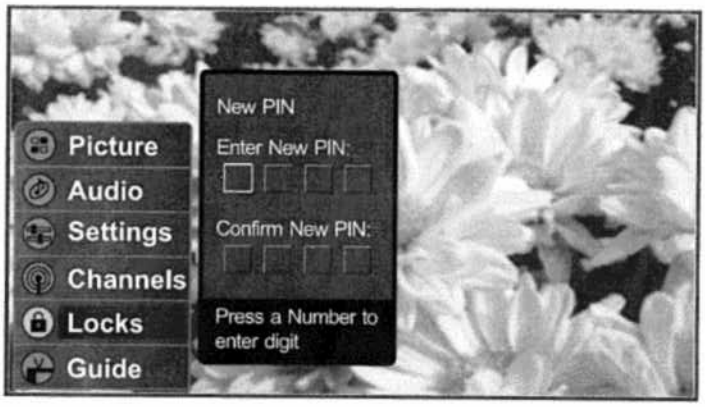


The TV allows you to set a secret number when you access the [Locks] menu first time.
You may use 0-9 number buttons to enter a new four-digit secret number, and then confirm the new secret number by entering it again.

**Once the secret number is set successfully, the TV requests you to enter secret number if you are going to:**

- *Access to the [Locks] menu.*
- *Scan channels automatically.*
- *Find channel manually.*
- *View a blocked program.*
- *Reset all settings to defaults by using the [RESET ALL] item in [Settings] menu.*

**The secret number is very important, please keep it carefully. As a precautionary measure, make a note of your secret number and keep it in a familiar place.**

## *Menu Navigation*

1. Press to display the Main menu.

2. Press to highlight the menu items.

3. Press to enter the sub-menu field.

4. Press to select items in the sub-menu.
   Press to adjust the selected items or move the on-screen cursor in the sub-menu.
   Press to confirm your operation or alter the settings for some items such as [Cinemotion].

5. Press to return to previous screen.

6. Press to return to normal picture.

## Turning On/Off

### Turning On

Firstly, Plug in the AC power cord to the AC outlet.

Press **POWER**⏻ on the TV or press **POWER**⏻ on the remote control.

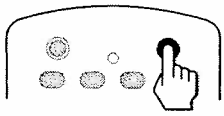

*Never attempt to move the TV unless the AC power cord has been disconnected.*

The initial setup starts when the TV powers on for the first time. If the TV has been turned on before, it displays current input signal directly.

### Turning Off

Press **POWER**⏻ on the TV or press **POWER**⏻ on the remote control.

The TV enters standby mode and the image on the screen disappears.

*The TV will still consume some power as long as the AC power cord is still inserted into the wall outlet.*

*If you are not going to use this TV for a long period of time, be sure to remove the AC power cord from the power outlet.*

## Introducing Channel Number

This television is capable of receiving the full range of cable-TV channels available today, from the most digital and HDTV channels, to the traditional analog channels.

As the transition toward full digital TV continues, some cable-TV systems in the USA will have a mixture of analog and digital channels in their lineups. So in most situations the ATSC PSIP channel number is composed of a major channel number and a minor channel number. The major channel number is same for both analog and digital channels (It is equal to the NTSC channel number for existing broadcasters). An analog channel usually has a minor channel number of zero, while a digital channel usually has a minor channel number of 1, 2 or larger.

## Selecting Channels

You can select analog channels in serveral ways.

***Method 1 - Using CH+ or CH- on the remote control or on the TV***

Press the **CH+** or **CH-** to cycle among all available channels. Only those channels marked with a tick symbol can be selected by the **CH+** or **CH-** button.

***Method 2 - Using FLASHBACK ⟲ on the remote control***

Press **FLASHBACK** to switch to the previously tuned channel.

Press **FLASHBACK** again to switch back to the currently tuned channel.

***Method 3 - Using 0-9 and OK on the remote control***

- ***For analog TV channels***

Press the **0-9** number buttons to input a channel number and confirm with **OK** to select up to 125 channels for VHF/UHF/CATV.

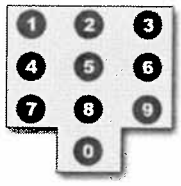

## Selecting Channels

• ***For digital TV channel***

Press the **0-9** number buttons and **dash(-)** to input a digital channel number, the TV goes to the selected channel directly. (e. g., channel 8-3, just press **8**, **-** and **3** one by one)

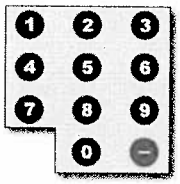

*If you enter channel number with 0-9 only (without pressing OK), channel selection will be made if there is no operation for a few seconds.*

***Method 4 - Using master channel list***

Press the **LIST** button to display the master channel list, you may select channel with the ▲▼and **OK** buttons.

***Method 5 - Using favorite channel list***

Press the **FAVORITE** button to display a desired favorite channel list, you may select channel with the ▲▼and **OK** buttons.

## Adjusting Volume

***Using VOL+ or VOL- on the remote control or on the TV***

Press the **VOL+** or **VOL-** to increase or decrease the volume.

***Using MUTE on the remote control***

Press **MUTE** to mute the sound. Press it again to cancel the mute.

## Using FREEZE button

Press **FREEZE** to temporarily capture a program's picture. You can use this feature to write down information such as phone numbers, recipes, etc. You may press any key to cancel FREEZE and return to normal viewing.

*The TV automatically cancel FREEZE and return to normal viewing in about a minute.*

## Using ZOOM button

Press **ZOOM** repeatedly to choose a proper screen aspect ratio. The following mode may available for your choice.

***Normal***

Select to match the source's image.( 4:3 to 4:3, 16:9 to 16:9)

*The zoom mode options may differ from different formats of the input signal.*

Example:

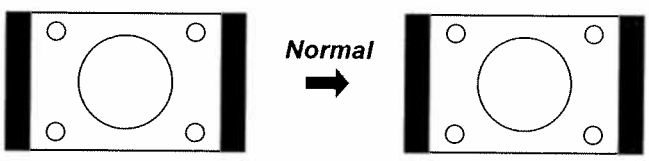


Source Final

*When you choose **NORMAL** to view a 4:3 program, two black bars keep on the two sides of the screen.*
*For additional protection to the screen, when you are viewing a 4:3 program, please DO NOT use the **NORMAL** feature for a long period of time.*

## Using ZOOM button

***Direct***

Select to detect the resolution of the signal and display an image with the same number of pixels on the screen.

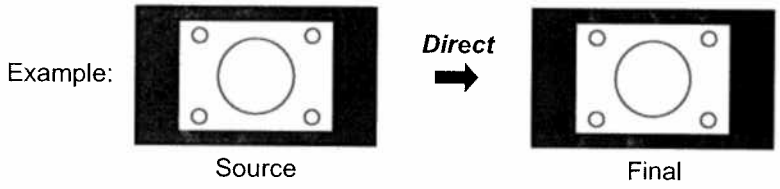


***Full Screen***

Select to enlarge the 4:3 picture horizontally only, to fill the display area.

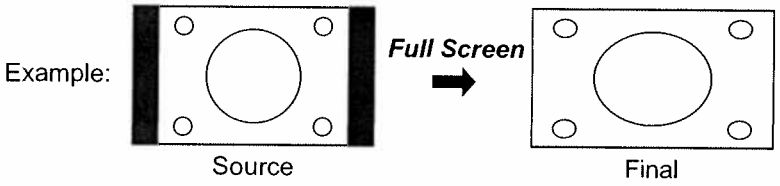


***Panoramic***

Select to enlarge the 4:3 picture to fill the 16:9 screen, keeping the original image as much as possible.

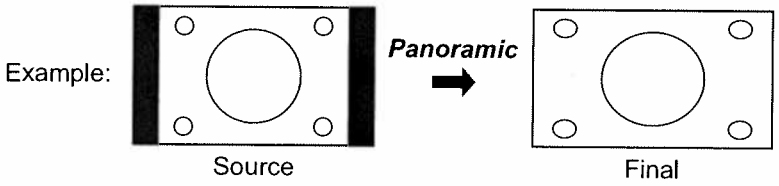


***ZOOM 1***

Select to enlarge the picture horizontally and vertically to an equal aspect ratio that fills the wide screen.

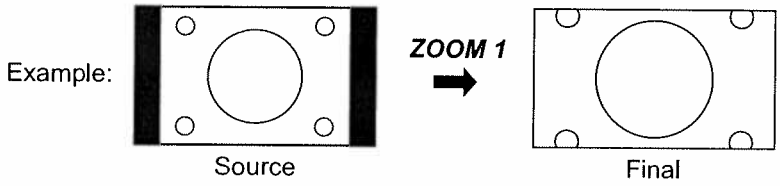


***ZOOM 2***

Select to view wide-screen DVDs in full screen.

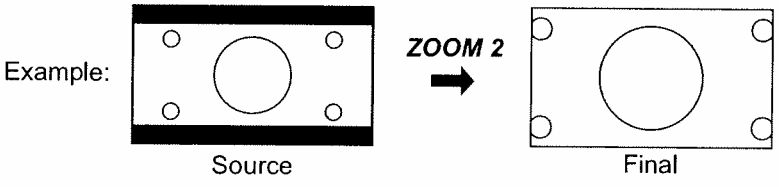

Depending on the signal tuned, you may see different MENU options on your screen. As an example, Menus displayed below are based on TV mode.

## Picture Control

### Accessing Picture Menu

1. Press **MENU**.....

2. Highlight **[Picture]**.....

   *Use ▲ or ▼ button.*

3. Press **OK**.....

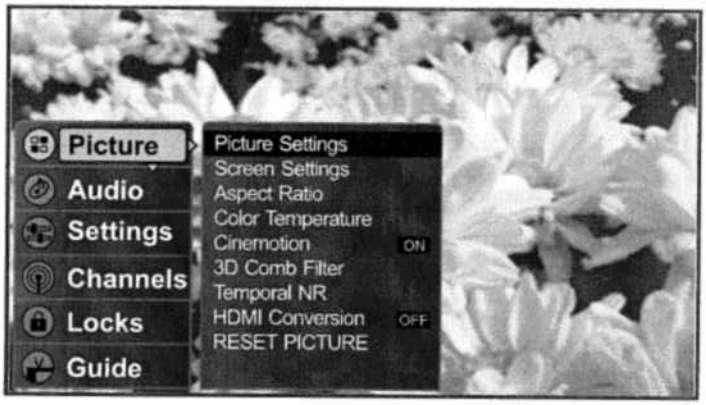


To highlight an option and to change settings, press ▲▼◄►. Press **OK** to confirm the selection or alter the settings. Press **EXIT** to exit.

### Selecting Picture Options

*To quickly change the aspect ratio, press the **ZOOM** button repeatedly.*

| Option | Description |
|---|---|
| Picture Settings | Select to access a picture adjustment window, see [***Adjusting Picture Settings***] on next page. |
| Screen Settings | Select to access a screen adjustment window for VGA or Component input, see [***Adjusting Screen Settings***] on next page. |
| Aspect Ratio | Select to access a window in which you can choose a proper aspect ratio for 4:3 or 16:9 program. Select from [Normal], [Direct], [Full Screen], [Panoramic], [ZOOM 1] and [ZOOM 2]. |
| Color Temperature | Choose from the following color temperatures:<br>**Cool** Select to give the white colors a blue tint.<br>**Neutral** Select to give the white colors a neutral tint.<br>**Warm** Select to give the white colors a red tint. |
| Cinemotion | Select [ON] to optimize the screen display automatically detecting film content and applying a reverse 3-2 pull down process. Moving picture will appear clearer and more natural looking. Select [OFF] to disable the detection. |
| 3D Comb Filter | Select to provides high quality images with minimal dot crawl and cross color noise.<br>Select from [Off], [Low], [Medium] and [High]. |
| Temporal NR<br>*(Analog)* | Select to reduce the noise level of connected equipment. This also reduces the noise level to the signal from the RF jack.<br>Select from [Off], [Low], [Medium] and [High]. |
| HDMI Conversion | Select to change color space for some irregular HDMI signal. Select [ON] when you find abnormal color while viewing HDMI programs. Be sure to select [OFF] for normal HDMI signal. |
| RESET PICTURE | Select to reset picture settings and adjustments to the defaults. |

# Adjusting MENU Options

## Picture Control

### Adjusting Picture Settings

| Option | Description |
|---|---|
| Preset | Select to choose a picture mode to best match environment of the TV, which can vary due to factors like room brightness, type of program watched or the type of image input from external equipment. |
| | **Standard** Select for a highly defined image in a normally bright room. |
| | **Vivid** Select for enhanced picture contrast and sharpness. |
| | **Movie** Select for a movie. |
| | **Pro** Select for a normal picture. |
| | **Custom** Select to customize the picture as desired. |
| | *To quickly change the picture mode, press the **PICTURE** button repeatedly.* |
| Brightness | Select to adjust picture brightness. |
| Contrast | Select to adjust picture contrast. |
| Saturation | Select to adjust color saturation for current picture. |
| Tint | Select to adjust natural flesh tones. |
| Sharpness | Select to adjust clarity of outline detail. |

### Adjusting Screen Settings

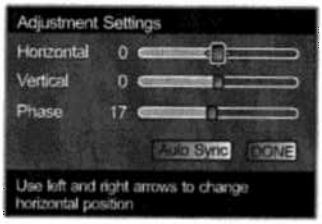


| Option | Description |
|---|---|
| Horizontal | Select to adjust horizontal position for the image. |
| Vertical | Select to adjust vertical position for the image. |
| Phase | Adjust when characters have low contrast or when the image flickers. |
| Auto Sync | Select to automatically adjust the PC image. |

*The [Screen Settings] window can't be accessed unless the TV works in D-Sub or Component mode.*

*In Component mode, the [Auto Sync] item is unavailable.*

*In Component mode, when the unit receives 480i signal, the [Vertical] item is ineffective unless its value is larger than 0. Please do not adjust the [Vertical] item to a negative value.*

## Audio Control

### Accessing Audio Menu

1. Press **MENU**.....

2. Highlight [**Audio**].....

   *Use ▲ or ▼ button.*

3. Press **OK**.....

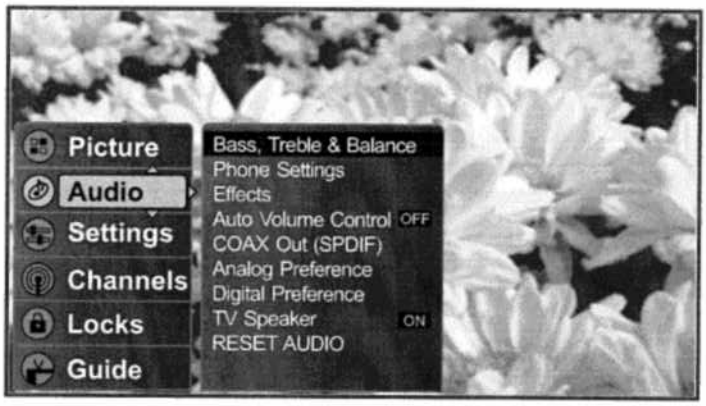


To highlight an option and to change settings, press ▲▼◄►. Press **OK** to confirm the selection or alter the settings. Press **EXIT** to exit.

### Selecting Audio Options

*To quickly change the audio mode, press the **AUDIO** button repeatedly.*

*For analog channels, you may use the **MTS/SAP** button to cycle through the Multi-channel TV Sound options.*
*For digital channels, you may use the **MTS/SAP** button to quickly select audio track if available.*

| Option | | Description |
|---|---|---|
| Bass, Treble & Balance | | Select to access an audio adjustment window. |
| | **Bass** | Adjust to increase or decrease lower-pitched sounds. |
| | **Treble** | Adjust to increase or decrease higher-pitched sounds. |
| | **Balance** | Adjust to emphasize left or right speaker balance. |
| Phone Settings | | Select to access a phone settings window. All adjustments in this window have an effect on the headphone only. |
| | **Volume** | Adjust to increase or decrease phone volume. |
| | **Bass** | Adjust to increase or decrease lower-pitched sounds. |
| | **Treble** | Adjust to increase or decrease higher-pitched sounds. |
| | **Balance** | Adjust to emphasize left or right speaker balance. |
| Effects | **None** | Select to turn off the sound effect. |
| | **Hall** | Select for a concert program. |
| | **Theater** | Select for a movie program. |
| | **Music** | Select for a music program. |
| | **Speech** | Select for a spoken dialog program. |
| Auto Volume Control | **ON** | Select to equalize overall volume levels across all channels. |
| | **OFF** | Select to turn off Auto Volume Control. |
| COAX Out (SPDIF) | **AUTO** | Select to output audio signal as its original format. |
| | **PCM** | Select to output audio signal by PCM form. |
| Analog Preference | | Use this item to select a stereo mode as a default mode when you switch your TV to a analog program. Select from [Mono], [Stereo] and [SAP]. |
| | **Mono** | Select for mono reception. Use to reduce noise during weak stereo broadcasts. |
| | **Stereo** | Select for stereo reception when viewing a program broadcast in stereo. |
| | **SAP** | Select to automatically switch the TV to second audio programs when a signal is received. If no SAP signal is present, the TV remains in Stereo mode. |
| Digital Preference | | Use this item to select a language as a default language when you switch your TV to a digital program. |
| TV Speaker | | Select to turn the TV speakers ON or OFF. |
| RESET AUDIO | | Select to reset audio settings to the defaults. |

# Adjusting MENU Options

## Setting Channels

### Accessing Channels Menu

1. Press **MENU**.....

2. Highlight [**Channels**]...

   *Use ▲ or ▼ button.*

3. Press **OK**.....

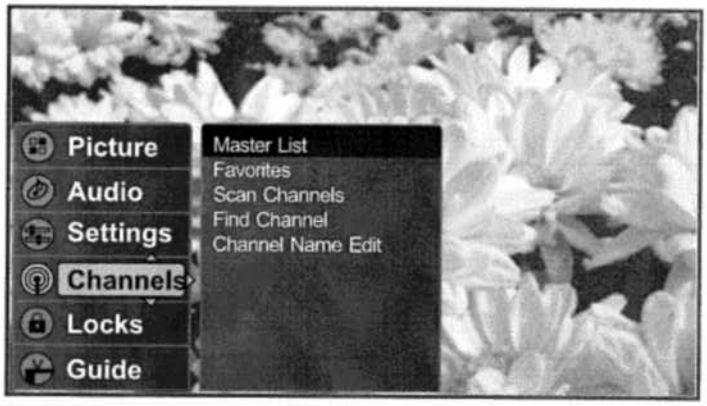


To highlight an option and to change settings, press ▲▼◄►. Press **OK** to confirm the selection or alter the settings. Press **EXIT** to exit.

### Selecting Channel Options

| Option | Description |
|---|---|
| Master List | Select to display all available channels scanned by Auto Program in initial setup. See [***Setting Channel List***] on this page. |
| Favorites | Allows you to setup favorite channels in 3 different categories. See [***Setting Favorite Channels***] on next page. |
| Scan Channels | Allows you to run Auto Program manually. You may need to run Auto Program manually if you interrupt the Auto Program process in initial setup. Please refer to [***Running Initial Setup***] for the detailed steps.<br>You will be asked to input a correct secret number before you access the [Channel Scan] screen. |
| Find Channel | Allows you to find channel manually by input the RF channel number. Please contact your local station or cable operator for this RF channel number information.<br>You will be asked to input a correct secret number before you access the [Find Channel] screen. |
| Channel Name Edit | Allows you to assign labels (such as station call letters) to a selected channel. See [***Editing Channel Name***] on next page. |

### Setting Channel List

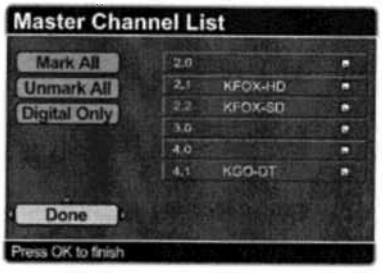


In the [Master Channel List] window, you may mark or unmark the desired channels. Only those channels marked with a tick symbol can be selected by the **CH+** or **CH-** button. The unmarked channel(s) can be selected only by 0-9 number buttons.
Mark All: select to mark all channels.
Unmark All: select to unmark all channels.
Digital Only: Select to mark digital channels only.
Be sure to select [Done] if you finish setting channel list.

*Also, you may access the master channel list by pressing the **LIST** button.*

## Setting Channels

### Setting Favorite Channels

The unit allows you to setup 3 groups (FAV 1, FAV 2 and FAV 3) of favorite channels. You may set up to 16 channels for each favorite channel list.

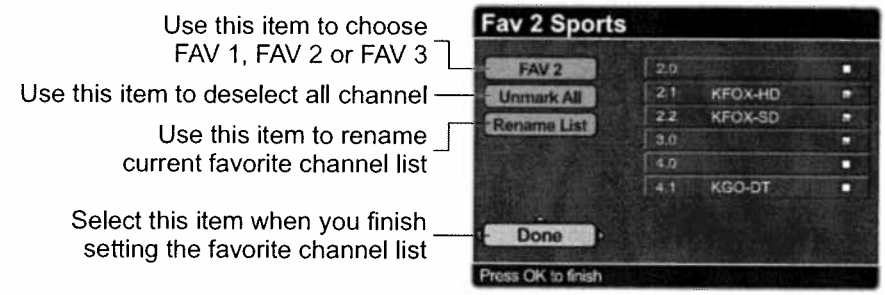


#### *Rename Favorite Channels List*

The unit has assigned a name for each favorite list. For example, the preset name of FAV 2 is Sports. The unit also allows you to rename each list as desired.
Press ▲▼◄ ► to move through the label characters (A-Z, 0-9, etc.). Then press **OK** to select the highlighted character. Repeat to add characters to the label.
**Back:** select to move cursor backward for one character.
**Shift:** select to change uppercase or lowercase for A-Z .
**Clear:** select to clear current inputs.
Select [Done] when you finish labeling current list.

### Using the FAVORITE button

Press **FAVORITE** button repeatedly to quickly select [FAV 1], [FAV 2] or [FAV 3]. The screen displays current favorite list name and those favorite channels under current list so that you can easily accessing them by press ▲ or ▼ buttons.
If current channel has been assigned to current list, the unit allows you to remove current channel from current list by selecting [Remove] item. Also, if current list does not include current channel, the unit allows you to add current channel into current list by selecting [Add] item.

### Editing Channel Name

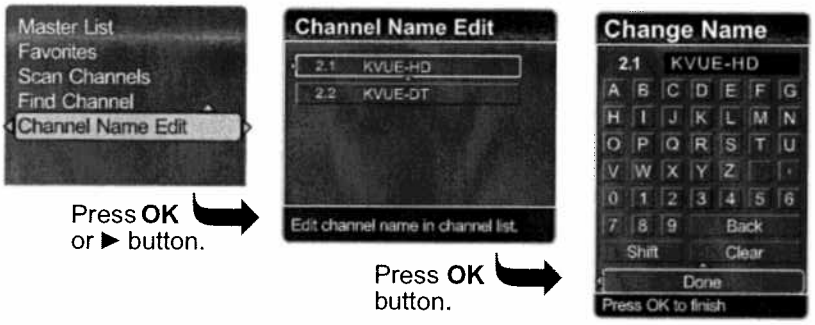


The unit allows you to assign a label to all available channels as desired by using this feature. In the [Channel Name Edit] window, you need to select a desired channel you want to rename. Please use ▲▼◄ ► and **OK** buttons to input a desired label name. Be sure to select [Done] item when you finish input.

# Adjusting MENU Options

## *Using the Program Guide*

### *Accessing Program Guide*

1. Press **MENU**.....

2. Highlight [**Guide**].....

   *Use* ▲ *or* ▼ *button.*

3. Press **OK**.....

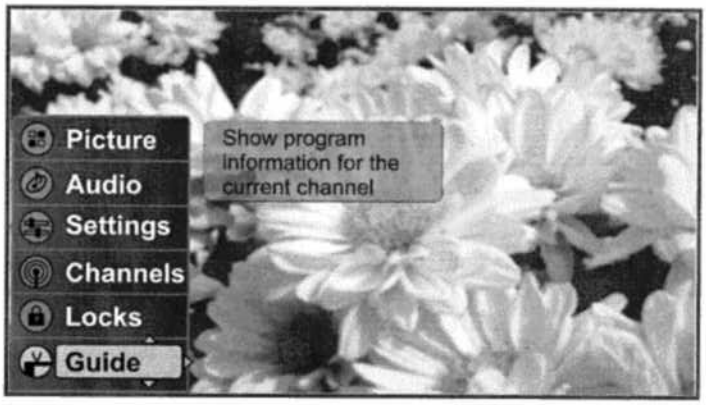


### *Using the Program Guide*

This TV is equipped to show program information if it is available from the station. The Program Guide provides some information for current viewing program and next program if next program information is available. The information may include channel number, channel name, program title, broadcast time, brief introduction, etc. Normally, you may access program guide by:

- Using the [***Guide***] menu.
- Using the **GUIDE** button.
- Using the **INFO** button.

Press the **GUIDE** button while watching a program, a simplified information windows appears with channel number, channel name, program title, etc.
If you want to view more detailed information such as program introduction, press the ▲ or **GUIDE** button.

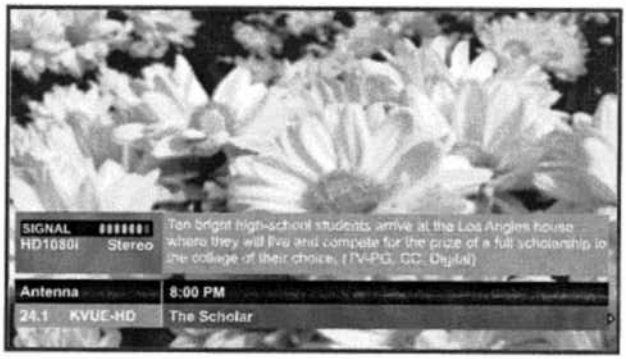


If the information of next program is available, a triangle appears on the bottom-right part of the screen, you may press the ▶ button to access.

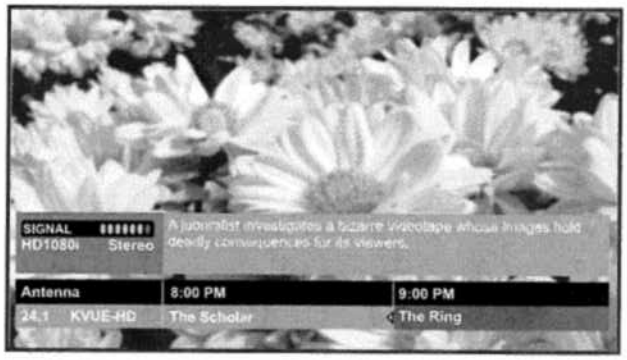

## Setting System

### Accessing Settings Menu

1. Press **MENU**.....

2. Highlight [**Settings**].....

   *Use ▲ or ▼ button.*

3. Press **OK**.....

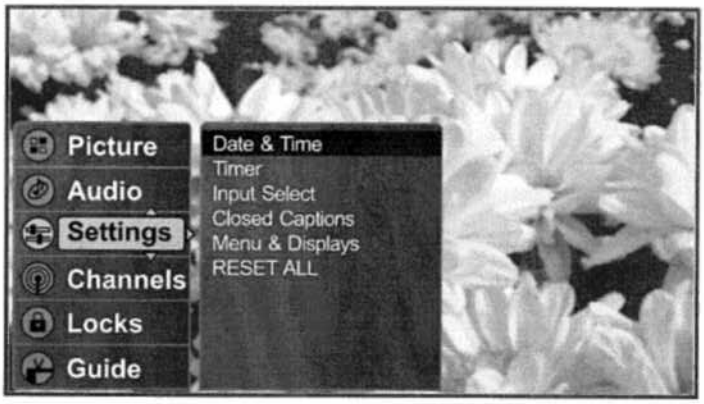


To highlight an option and to change settings, press ▲▼◄►. Press **OK** to confirm the selection or alter the settings. Press **EXIT** to exit.

### Setting Date & Time

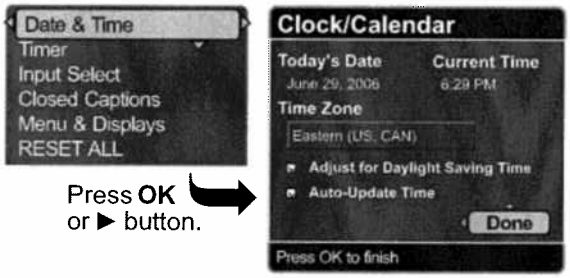


*Once the AC power is cut off completely, the [Today's Date] and [Current Time] items need to be set again when you turn on the unit next time.*

*When the [Auto-Update Time] is set to ON, the [Today's Date] and [Current Time] items can't be accessed.*

| Option | Description |
|---|---|
| Today's Date | Select to set date. |
| Current Time | Select to set current time. |
| Time Zone | Select a proper time zone according to your local area. |
| Adjust for Daylight Saving Time | Select to observe daylight saving time. |
| Auto-Update Time | Select to automatically update time from the service provider if this information is broadcasted with the program as well. |

### Setting Timer

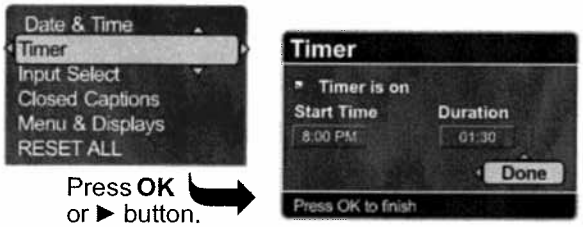


*By using the **SLEEP** button, the TV allows you to set the amount of time (15 minutes, 30 minutes, 45 minutes, 60 minutes or 90 minutes) that you want the TV to remain on before shutting off automatically.*
*If you select [Leave TV on], the unit cancel the sleep timer setting.*

| Option | Description |
|---|---|
| Timer is on | Select to activate current timer. |
| Start Time | Select to set a start time so that the TV automatically turns on at the selected time. |
| Duration | Select to set a duration time that you want the TV to remain on before shutting off automatically. |

*When the TV automatically turns on at the select time, if the user operate the TV by pressing any button, the TV automatically cancel the duration time and remains on unless the user turn off the TV.*
*Once the timer is activated and performed, the Timer setting will be canceled automatically. The user need to set the Timer again if you want to use this feature next time.*

# Adjusting MENU Options

## Setting System

### Input Select

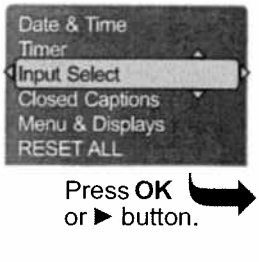


*To quickly change the input type, press the **INPUT** button repeatedly.*

### Setting Caption Vision

| Option | Description |
|---|---|
| Basic Selection | Allows you to select basic closed caption options. |
| | **CC1, CC2, CC3, CC4** Displays a printed version of the dialog or sound effects of a program. (Should be set to CC1 for most programs.) |
| | **Text1,Text2, Text3,Text4** Displays network/station information presented using either half or the whole screen (if available). |
| Advanced Selection | Allows you to select advanced digital closed caption options. Select from the available options. |
| Advanced Appearance | Allows you to make additional settings for digital closed caption options. You may set the following items as desired: Text Style, Text Color, Text Opacity, Text Size, Text align Edge Color, Edge Style, Background Color, Background Opacity, Frame Color and Frame Opacity. |
| Caption Preference | Allows you to set digital closed captioning to Basic (digital EIA-608) or Advanced (digital EIA-708). Select from [Always Basic], [Always Advanced] and [Automatic]. |
| RESET CC | Select to reset Closed Captions to the default settings. |

### Using the CCD button

Press the CCD button repeatedly to select [Off], [On] or [On when muted].

| Option | Description |
|---|---|
| On | Select to turn on the Closed Captions. |
| Off | Select to turn off the Closed Captions. |
| On when muted | Select to turn on the Closed Captions when the TV is muted. |

### Setting Menu & Display

| Option | Description |
|---|---|
| Menu Language | Allows you to select an on-screen menu language. Select from [English], [French] and [Spanish]. |
| Input Labels Edit | Select to edit input labels as desired or according to the connected device. See [***Editing Input Labels***] on next page. |
| Screen Saver | Select to set screen saver. See [***Setting Screen Saver***] on next page. |
| RESET DISPLAY | Select to reset display settings to the defaults. |

## Setting System

### Editing Input Labels

1. Highlight [Menu & Displays] item in **[Settings]** menu.
   Press **OK** or ► button to access the sub-menu.

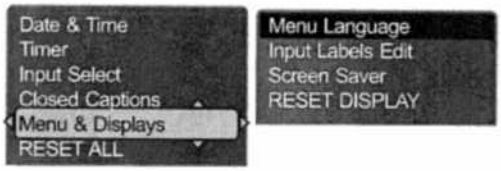


2. Highlight [Input Labels Edit] item.
   Press **OK** or ► button to enter.

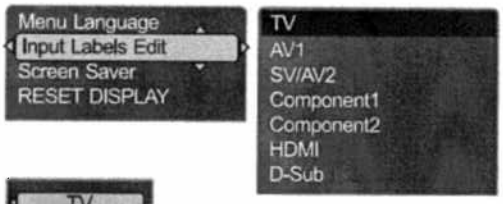


3. Highlight a desired Input Label you want to edit. As an example, highlight [TV].
   Press **OK** or ► button to enter.

4. Highlight [Custom Label] item.
   Press **OK** button to enter.

5. The Label editing window appears. Please use ▲▼◄ ► and **OK** buttons to input a desired label name. Be sure to select [Done] item when you finish input.

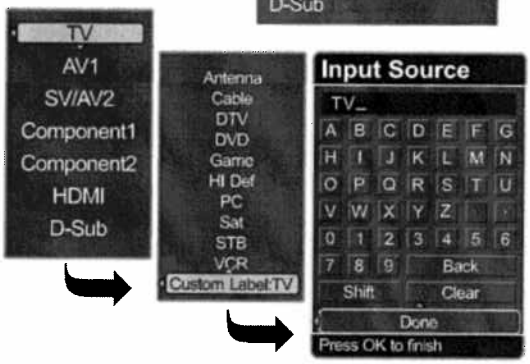


### Setting Screen Saver

| Option | Description |
|---|---|
| Activation Delay | Select to set a delay time before the screen saver is activated when there is no input signal. |
| Background Color | Select to set a background color when the screen saver is activated. |
| Test | Select to preview the screen saver. |
| RESET SCREEN SAVER | Select to reset the settings of the screen saver to the defaults. |

### Running Reset System

**WARNING: Running the [RESET ALL] item will clear all of your customized settings.**

Please make sure that you want reset all settings to the factory defaults before you perform this operation. You will be asked to input a correct secret number when you select [RESET ALL] item in the [SETTINGS] menu.
When the system is reset successfully, all customized settings will be cleared and the unit runs initial setup wizard.

# Adjusting MENU Options

## *Parental Lock Control*

### *Accessing Locks Menu*

1. Press **MENU**.....

2. Highlight [**Locks**].....
   *Use ▲ or ▼ button.*

3. Press **OK**.....

4. Enter a correct PIN.
   *Use **0-9** number buttons.*

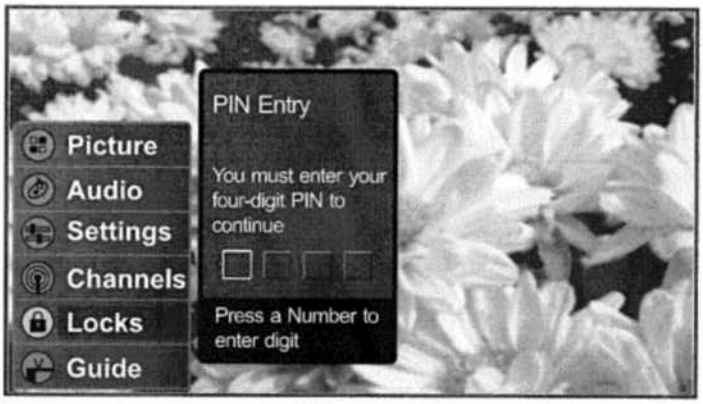


If it is the first time to access the [***Locks***] menu, the unit allows you to set a secret number as desired, please refer to [**Setting a Secret Number**] in chapter [***Getting Start***].

Once the correct PIN is entered, the [***Locks***] menu displays as below.

To highlight an option and to change settings, press ▲▼◄►. Press **OK** to confirm the selection. Press **EXIT** to exit.

### *Selecting Locks Options*

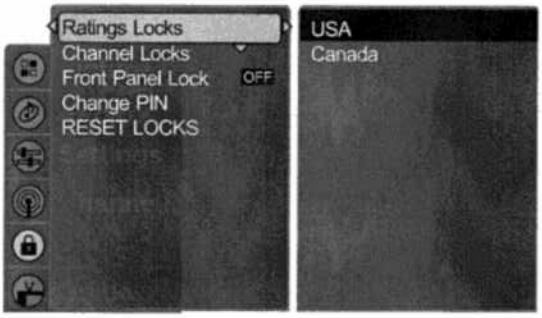


| *Option* | *Description* |
|---|---|
| Ratings Locks | The rating control gives parents a great degree of control over broadcasts accessed by their children. It allows parents to select programs judged suitable for child viewing while blocking ones judged not suitable. It does so automatically once you activate this feature in your TV. See [***Selecting Locks Options***] on next page. |
| Channel Locks | Select to access [***Channel Locks***] window, in which you may lock channels as desired. In this window, you may select [Lock All] to lock all available channels, or select [Unlock All] to unlock all channels. Also, you may use the ▲▼◄► and **OK** buttons to lock individual channel one by one as desired. The Lock channels will be marked with a 🔒 symbol. Be sure to select [Done] when you finish setting. |
| Front Panel Lock | **ON** Select to enable the panel buttons. |
| | **OFF** Select to disable the panel buttons. |
| Change PIN | Select to change PIN as desired. The old PIN is necessary if you want to change the PIN. |
| RESET LOCKS | Select to reset the locks settings to the defaults. The customized lock settings will be cleared if you select [RESET]. |

## Parental Lock Control

### Selecting Locks Options

*To ensure maximum blocking capability, the age-based ratings should be used.*

### US Custom Rating Options

| Option | Description | |
|---|---|---|
| USA-TV<br>*Block programs by their rating, content or both.* | **Age-Based Options** | |
| | **TV-Y** | All children. |
| | **TV-Y7** | Directed to children age 7 and older. |
| | **TV-G** | General audience. |
| | **TV-PG** | Parental guidance suggested. |
| | **TV-14** | Parents strongly cautioned. |
| | **TV-MA** | Mature audience only. |
| | **Content-Based Options** | |
| | **FV** | Fantasy violence. |
| | **D** | Suggestive dialog. |
| | **L** | Strong language. |
| | **S** | Sexual situations. |
| | **V** | Violence. |
| USA-Movie | **G** | All children and general audiences. |
| | **PG** | Parental guidance suggested. |
| | **PG-13** | Parental guidance for children under 13. |
| | **R** | Restricted viewing, parental guidance is suggested for children under 17. |
| | **NC-17** | No one 17 and under admitted. |
| | **X** | X is an older rating that is unified with NC-17 but may be encoded in the data of older movies. |

### Canadian Custom Rating Options

| Option | Description | |
|---|---|---|
| CAN-French | **G** | General programming. |
| | **8 ans+** | Not recommended for ages under 8. |
| | **13 ans+** | Not recommended for ages under 13. |
| | **16 ans+** | Not recommended for ages under 16. |
| | **18 ans+** | Programming restricted to adults. |
| CAN-English | **C** | All children. |
| | **C8+** | Children 8 years and older. |
| | **G** | General programming. |
| | **PG** | Parental guidance. |
| | **14+** | Viewers 14 and older. |
| | **18+** | Adult programming. |

***The content ratings will increase depending on the level of the age-based rating. For example, a program with a TV-PG V (Violence) rating may contain moderate violence, while a TV-14 V (Violence) rating may contain more intense violence.***

### Viewing Locked or Blocked Programs

You can view a locked or blocked program by entering the secret number.

1. Tuned to a locked or blocked program.
2. Enter your secret number using the 0-9 buttons.

Parental Lock will be canceled temporarily until you turn your TV off.

# Other Information

## Troubleshooting

If, after reading these operating instructions, you have additional questions related to the use of your television, please call the services center in your local area.
Before calling service, please check the symptoms and follow suggested solutions.

### Remote Control

| Problem | Possible Solutions |
|---|---|
| Remote control does not operate | • The batteries could be weak. Replace the batteries.<br>• Check the orientation of the batteries.<br>• Make sure the power cord is plugged in. |
| Remote control does not operate other brand equipment | • If you replaced the batteries to the remote recently, the code numbers for the video equipment may need to be reset.<br>• There may be more than one code for the equipment that you are attempting to operate.<br>• There is a possibility that this equipment can only be operated by its original remote control. |

### Video and Audio

| Problem | Possible Solutions |
|---|---|
| No picture (screen not lit), No sound | • Make sure the power cord is plugged in.<br>• Press POWER on the TV or on the remote control.<br>• Press the input source select button to cycle through the connected video sources.<br>• Try another channel; it could be station trouble. |
| Dark, poor or no picture (Screen lit), good sound | • Select a proper picture mode.<br>• Adjust the brightness in the video setting.<br>• Check the antenna/cable connections. |
| No color/dark picture/color Is not correct | • Adjust the color saturation in the video setting. |
| Only snow and noise appear On the screen | • Check the antenna/cable connections.<br>• Try another channel; it could be station trouble. |
| Dotted lines or stripes | • Adjust the antenna.<br>• Move the TV away from noise sources such as cars, neon signs, or hair dryers. |
| Double images | • Using a highly directional outdoor antenna or a cable may solve the problem. |
| "Black box" on screen | • You have selected a text option in the Setup setting and no text is available. Please try to turn off the Close Caption feature or select CC1 instead of Text 1-4. |
| Good picture, no sound | • The sound may be muted. Press MUTE again to cancel.<br>• Make sure the speaker option is set to On in the Audio settings.<br>• Make sure the stereo mode is set to stereo or mono. |
| Audio noise | • Communication problems may occur if infrared communication equipment (e.g., infrared cordless headphones) is used near the TV. Move the infrared communication equipment away from the TV until the noise is eliminated. |

## Troubleshooting

### General

| Problem | Possible Solutions |
|---|---|
| One or some channels can't be displayed | • These channels may be locked. Please unlock them (see Lock settings).<br>• These channels may be set to hidden in the master channel list. You may mark them with the tick symbol to cancel hidden or select them with 0-9 number buttons. |
| Lost password | • On the password screen, enter the following master password: 1397. You may use the master password to set a new password as desired. Please remember your new password and keep it carefully. |
| Some items can't be accessed | • If a setting option appears in gray, this indicates that the settings option is unavailable in current input mode. |
| TV cabinet creaks | • When the TV is in use, there is a natural rise in temperature, causing the cabinet to expand or contract and may be accompanied by a slight creaking noise. This is not a malfunction. |
| Control buttons do not operate | • Disconnect the power cord and wait for a few seconds. Then re-plug the power cord and turn on the unit again. |

**Notes:**

*If your problem is not solved, turn your unit off and then on again.*

**Cautions:**

*Never attempt to repair a defective TV yourself.*

## Care and Maintenance

### About Temperature

**Do not use in hot and cold rooms (locations)**

- When the unit is used in rooms (locations) with low temperature, the picture may leave trails or appear slightly delayed. This is not a malfunction, and the unit will recover when the temperature returns to normal.
- Do not leave the unit in a hot or cold location. Also, do not leave the unit in a location exposed to direct sunlight or near a heater, as this may cause the cabinet to deform and the screen to malfunction.
- Storage temperature: 0°C to +50°C
- Working temperature: 5°C to +40°C

### About After-Image

The extended use of fixed image program material can cause a permanent after-image on the screen.

This background image is viewable on normal programs in the form of a stationary fixed image. This type of irreversible screen deterioration can be limited by observing the following steps:

A. Reduce the brightness/contrast setting to a minimum viewing level.

B. Do not display the fixed image for extended periods of time.

C. Turn the power off when not in actual use.

**Important Information Regarding Use of Video Games, Computers, Captions or Other Fixed Image Displays.**

- Do not allow a still picture to be displayed for an extended period, as this can cause a permanent after-image to remain on the screen.

  Examples of still pictures include logos, video games, computer images, teletext and images displayed in 4:3 mode.

**CAUTIONS:**

- The permanent after-image on the screen resulting from fixed image use is not an operating defect and as such is not covered by the warranty.
- This product is not designed to display fixed images for extended periods of time.

### Cleaning and Maintenance

**To clean this unit, wipe with a soft, dry cloth.**

If the surfaces are extremely dirty, use a soft cloth dipped in a soap and water solution or a weak detergent solution.

- Use eyeglass cleaner to remove stubborn dirt from the screen.
- Never use alcohol, paint thinner or benzine to clean this unit.
- Before using a chemically treated cloth, read the instructions that came with the cloth carefully.

## *Specifications*

| | | |
|---|---|---|
| Type: | | LCD TV |
| Panel: | | 37" TFT LCD |
| TV system: | | American TV standard ATSC/NTSC System |
| Receiving Channel: | | |
| | VHF/UHF: | VHF 2-13ch, UHF 14-69ch |
| | CATV: | 1-125ch |
| | Digital Terrestrial Broadcast: | 2-69ch |
| | Digital cable: | 1-135ch |
| Audio multiplex: | | BTSC System |
| Audio out: | | 8W × 2 |
| Power Requirement: | | AC 110-240 V, 50/60 Hz |
| Power Consumption: | | 200 W |
| Dimensions (W X H X D in inches): | | 37.2 × 28.9 × 12.2 |
| Weight: | | 70.4 lbs/32 kg |
| Terminals: | | |
| IN | Composite Video/Audio(L/R): | 2 |
| | S-video: | 1 |
| | Component Video/Audio(L/R): | 2 |
| | HDMI interface: | 1 |
| | D-Sub/Audio: | 1 |
| | Antenna: | 1 |
| OUT | Composite Video/Audio(L/R): | 1 |
| | Coaxial Digital Audio Out: | 1 |
| | Headphone jack: | 1 |
| Control | RS-232: | 1 |
| | USB Port: | 1 |

- **As part of policy of continuous improvement, the manufacturer reserves the right to make design and specification changes for product improvement without prior notice. The performance specification figures indicated are nominal values of production units. There may be some deviations from these values in individual units.**

## Programming your Remote Control

### Introduction

Your remote lets you control four devices with one easy-to-use, compact unit. After installing batteries, you can program the remote to control your VCR or DVD, Cable or Satellite Receivers, Amplifier or Tuner, and Auxiliary devices. To do so, follow the instructions in "Programming a Device". For best results, please read and follow all the remaining instructions. Keep this guide for future reference.

*The universal remote control unit can't be programmed to control a TV with other brand. It has been preset to control this TV set, and this preset is unchangeable.*

### A Quick Look at Programming a Device

To control VCR or DVD, Cable or Satellite Receivers, Amplifier or Tuner, and Auxiliary devices, follow these steps. Before proceeding, find the codes for the devices you want to program in [**Manufacturer's Codes**] and write them down or highlight them.

*To program a DVD Player, portable DVD player, or mobile DVD player, use the **DVD** key.*

1. Turn on the device (for example, DVD player) and, if needed, load media (for example, a DVD).
2. Press a device key (**VCR/DVD, CBL/ SAT,** or **AUX**).
3. Press and hold **SET** until the red LED blinks twice; then release.
4. Enter the first five-digit code for your device. The LED blinks once as each digit is entered. If the code is correct, the LED blinks twice.

*If the LED does not blink twice, repeat steps 2 to 4 and try entering the code again.*

5. Aim the remote at the device and press **Power**. The device should turn off. If it does not, repeat steps **3** to **5**, trying each code for your brand until you find one that works. If you cannot find a code that works, see "Searching for Your Code".
6. Repeat steps **1** to **5** for the other devices you want to control. For future reference, write down each working device code below:

   **AUX** Code: _____
   **CBL** Code: _____
   **CD** Code: _____
   **DVD** Code: _____
   **SAT** Code: _____
   **TNR** Code: _____
   **VCR** Code: _____

7. Press **SET** to save and exit

### Searching for your Code

If your device does not respond to the remote after trying all codes listed for your brand, or if your brand is not listed, try searching for your code:

1. Press a device key once.
2. Press and hold **SET** until the red LED blinks twice; then release.
3. Enter **9-9-1**, then the device group number (0= Cable, 1= TV, 2= VCR, 3= Audio). The LED blinks twice.
4. Aim the remote at the device and press **Power**. The remote sends IR codes from its library to the selected device, starting with the most popular code first. If the device responds, go to step **7**.
5. If the device does not respond, press **CH+**. The remote will try the next code. Continue until the device responds.

*Press **CH-** to try the previous code.*

6. To search for other device codes, repeat steps **1** to **5**.
7. Press **SET** to save and exit.

## Programming your Remote Control

### Checking the Codes

If you have set up the remote using the procedure in "Searching for Your Code", you may need to find out which four-digit code is operating your equipment. For example, to find out which code is assigned to your DVD:

1. Press **DVD** once.
2. Press and hold **SET** until the red LED blinks twice; then release.
3. Enter **9-9-0**. The LED blinks twice.
4. To view the code for the first digit, press **1**. Count the LED blinks (for example, three blinks = 3), and write down the number in the appropriate code listing in step **6** under "Programming a Device".

*If a code digit is **0**, the LED does not blink.*

5. Repeat step **4** for the four remaining digits, using **2** for the second digit, **3** for the third digit, **4** for the fourth digit, and **5** for the fifth digit.
6. To check for other device codes, repeat steps **1 to 5**, substituting the device key for **DVD**.

### Changing Volume Lock

The remote comes preset to allow independent volume control of each selected device (Global Volume Unlock). However, you may change the Volume Lock setting to Global Volume Lock so that one device's volume will control volume in all other modes. After that, you can perform Individual Volume Unlock on a selected device to set its volume control for independent operation or Global Volume Unlock to remove all volume locking.

**Locking Volume Control to One Mode (Global Volume Lock)**

1. Press and hold **SET** until the red LED blinks twice; then release.
2. Enter **9-9-3** and then press the mode key for the device you want to control volume (for example, **DVD**). The LED blinks twice. Now when you press **VOL+**, **VOL-**, or **Mute**, the selected device (for example, **DVD**) will control the volume regardless of the current mode.

**Unlocking All Volume Control (Restoring Global Unlock)**

1. Press and hold **SET** until the red LED blinks twice; then release.
2. Enter **9-9-3** and then press **VOL+**. The LED blinks four times. Volume is now independently controlled for all programmed devices.

**Unlocking a Single Device's Volume Control**

1. Press a device key (**VCR/DVD, CBL/ SAT,** or **AUX**).
2. Press and hold **SET** until the red LED blinks twice; then release.
3. Enter **9-9-3** and then press **VOL-**. The LED blinks four times. Volume is now independently controlled for the selected devices.

### Troubleshooting

| Problem | Solution |
|---|---|
| LED does not blink when you press a key. | Replace new batteries. |
| LED blinks when you press a key, but device does not respond. | Make sure the remote is aimed at your device and is not more than 15 feet away. |
| LED blinks one long blink. | An entry error has occurred (for example, wrong key). Try entry sequence again. |
| Remote does not control devices or commands are not working properly. | Try all listed codes for the device. Make sure the device operates with an infrared remote control. |

### CARE

- Keep the remote dry. If it gets wet, wipe it dry immediately.
- Use and store the unit only in normal temperature environments.
- Handle the remote gently and carefully. Don't drop it.
- Wipe the remote with a damp cloth to keep it looking like new.

## Manufacturer's Codes

### Audio Amplifiers

| Manufacturer | Codes |
|---|---|
| Bose | 30674 |
| GE | 30078 |
| JVC | 30331 |
| Marantz | 30321 |
| Nakamichi | 30321 |
| NEC | 30264 |
| Optimus | 30395 |
| Realistic | 30395 |
| Sansui | 30321 |
| Shure | 30264 |
| Sony | 30689 |
| Soundesign | 30078 |
| Victor | 30331 |
| Wards | 30078 |
| Yamaha | 30354, 30133 |

### Audio Amp/Tuners

| Manufacturer | Codes |
|---|---|
| ADC | 30531 |
| Aiwa | 31405, 31243, 30121 |
| Anam | 31609, 31074 |
| Audiotronic | 31189 |
| Bose | 31229 |
| Capetronic | 30531 |
| Carver | 31189 |
| Coby | 31263 |
| Denon | 31360, 31142, 30904 |
| Fonmix | 31360 |
| Glory Horse | 31263 |
| Harman/Kardon | 30110 |
| Hitachi | 31273 |
| Inkel | 30027 |
| Integra | 30135 |
| JBL | 30110 |
| JVC | 30074, 31263 |
| Kenwood | 31313, 31570, 30027 |
| KLH | 31428 |
| Magnavox | 31189, 31269, 30531 |
| Marantz | 31189, 31269, 30039 |
| MCS | 30039 |
| Onkyo | 30842, 30135 |
| Optimus | 31023, 30670, 30531, 31074 |
| Panasonic | 31518, 30039 |

## Manufacturer's Codes

### Audio Amp/Tuners

| Manufacturer | Codes |
|---|---|
| Philips | 31189, 31269 |
| Pioneer | 31023, 30150, 30014, 30630, 30531 |
| Proscan | 31254 |
| Qisheng | 31609 |
| Quasar | 30039 |
| RadioShack | 31263 |
| RCA | 31023, 31609, 31254, 30531, 31074 |
| Sharper Image | 31263 |
| Silsonic | 30176 |
| Sony | 31258, 31759 |
| Soundesign | 30670 |
| Stereophonics | 31023 |
| Sunfire | 31313 |
| Teac | 31074, 31267 |
| Technics | 31308, 31518, 30039 |
| Thorens | 31189 |
| Victor | 30074 |
| Wards | 30014 |
| Yamaha | 30176, 31276, 31176 |

### Cable Converters

| Manufacturer | Codes |
|---|---|
| ABC | 00003, 00008, 00014 |
| Americast | 00899 |
| Bell & Howell | 00014 |
| Bell South | 00899 |
| Clearmaster | 00883 |
| ClearMax | 00883 |
| Coolmax | 00883 |
| Daeryung | 01877, 00877, 00477, 00008 |
| Digi | 00637 |
| Director | 00476 |
| Dumont | 00637 |
| Gehua | 00476 |
| General Instrument | 00476, 00810, 00276, 00003, 00014 |
| GoldStar | 00144 |
| Hamlin | 00009, 00273 |
| Hitachi | 00014 |
| Jerrold | 00476, 00810, 00276, 00003, 00012, 00014 |
| KNC | 00008 |
| LG | 00144 |
| Memorex | 00000 |
| Motorola | 00476, 00810, 00276, 01254, 01376 |
| MultiVision | 00012 |

# Other Information

## *Manufacturer's Codes*

### *Cable Converters*

| Manufacturer | Codes |
|---|---|
| Pace | 01877, 00237 |
| Panasonic | 00000, 00008, 00107 |
| Panther | 00637 |
| Paragon | 00000 |
| Philips | 00317, 01305 |
| Pioneer | 01877, 00877, 00144, 00533 |
| Pulsar | 00000 |
| Quasar | 00000 |
| RadioShack | 00883 |
| Regal | 00279, 00273 |
| Runco | 00000 |
| Samsung | 00000, 00144 |
| Scientific Atlanta | 01877, 00877, 00477, 00008 |
| Sony | 01006 |
| Starcom | 00003, 00014 |
| Supercable | 00276 |
| Supermax | 00883 |
| Tocom | 00012 |
| Torx | 00003 |
| Toshiba | 00000 |
| Trans PX | 00276 |
| Tristar | 00883 |
| TS | 00003 |
| V2 | 00883 |
| Viewmaster | 00883 |
| Vision | 00883 |
| Vortex View | 00883 |
| Zenith | 00000, 00525, 00899 |

### *CD Players*

| Manufacturer | Codes |
|---|---|
| Aiwa | 30157 |
| Burmester | 30420 |
| California Audio Labs | 30029 |
| Carver | 30157, 30179 |
| Denon | 30873 |
| DKK | 30000 |
| DMX Electronics | 30157 |
| Dynamic Bass | 30179 |
| Fisher | 30179 |
| Garrard | 30420 |
| Genexxa | 30032 |

## Manufacturer's Codes

### CD Players

| Manufacturer | Codes |
|---|---|
| Harman/Kardon | 30157, 30173 |
| Hitachi | 30032 |
| Integra | 30101 |
| JVC | 30072 |
| Kenwood | 30826, 30626, 30028, 30037, 30036, 30190 |
| Krell | 30157 |
| Linn | 30157 |
| Magnavox | 30157 |
| Marantz | 30626, 30029, 30157 |
| MCS | 30029 |
| Miro | 30000 |
| Mission | 30157 |
| MTC | 30420 |
| NSM | 30157 |
| Onkyo | 30868, 30101 |
| Optimus | 31063, 30000, 30032, 30037, 30420, 30179, 31075, 30145 |
| Panasonic | 30029 |
| Parasound | 30420 |
| Philips | 30626, 30157 |
| Pioneer | 31063, 31062, 30032 |
| Polk Audio | 30157 |
| Proton | 30157 |
| QED | 30157 |
| Quad | 30157 |
| Quasar | 30029 |
| RadioShack | 31075 |
| RCA | 31062, 30032, 30420, 30179, 30053 |
| Realistic | 30420, 30179 |
| Rotel | 30157, 30420 |
| SAE | 30157 |
| Sansui | 30157 |
| Sanyo | 30179 |
| SAST | 30157 |
| Sharp | 30861, 30037 |
| Silsonic | 30888, 30036 |
| Sonic Frontiers | 30157 |
| Sony | 30490, 30000, 30100 |
| Soundesign | 30145 |
| TAG McLaren | 30157 |
| Tascam | 30420 |
| Teac | 30420 |
| Technics | 30029 |

# Other Information

## *Manufacturer's Codes*

### *CD Players*

| Manufacturer | Codes |
|---|---|
| Victor | 30072 |
| Wards | 30157, 30053 |
| Yamaha | 30888, 30036 |
| Zonda | 30157 |

### *DVD Players*

| Manufacturer | Codes |
|---|---|
| Aiwa | 20641, 21912 |
| Akai | 20770 |
| Allegro | 20869 |
| Apex Digital | 20672, 20717, 20797, 21061, 20796, 21056, 21937, 20794, 21020, 21915 |
| Blaupunkt | 20717 |
| Blue Parade | 20571 |
| Broksonic | 20695 |
| Changhong | 20627, 21061 |
| CineVision | 20869 |
| Coby | 21086 |
| Curtis Mathes | 21087 |
| CyberHome | 21024, 21023, 21129, 20816, 21117 |
| Daewoo | 20833, 21172, 20869 |
| Denon | 20490 |
| DVD2000 | 20521 |
| Emerson | 20591, 20675 |
| Enterprise | 20591 |
| Fisher | 21919 |
| Funai | 20675 |
| Gateway | 21158, 21073 |
| GE | 20522, 20717 |
| Go Video | 20744, 20833, 21099, 20783, 21075, 20869, 21730 |
| Greenhill | 20717 |
| Harman/Kardon | 20582, 20702 |
| Hitachi | 20573, 20664, 21919 |
| Hiteker | 20672 |
| Initial | 20717 |
| Integra | 20627, 21924 |
| JBL | 20702 |
| JVC | 20558, 20623, 20867 |
| Kenwood | 20490, 20534 |
| KLH | 20717, 21020, 21149 |
| Koss | 20651, 21980 |

## Manufacturer's Codes

### DVD Players

| Manufacturer | Codes |
|---|---|
| Lasonic | 20798 |
| LG | 20591, 20869, 20801 |
| Liquid Video | 21980 |
| Lite-On | 21158, 21058 |
| Loewe | 20511 |
| Magnavox | 20503, 20539, 21976, 21914, 20675 |
| Marantz | 20539 |
| Memorex | 20695 |
| Microsoft | 20522 |
| Mintek | 20717 |
| Mitsubishi | 21521, 20521 |
| Nesa | 20717 |
| Norcent | 21003 |
| Onkyo | 20503, 20627, 21924, 20792 |
| Oritron | 20651, 21980 |
| Panasonic | 20490, 21762, 21990 |
| Philips | 20503, 20539, 20646, 21914 |
| Pioneer | 20525, 20571 |
| Polaroid | 21086, 21061 |
| Polk Audio | 20539 |
| Portland | 20770 |
| Proscan | 20522 |
| Qwestar | 20651 |
| RCA | 20522, 20571, 20717, 20822 |
| Rio | 20869 |
| Rotel | 20623 |
| Sampo | 20752, 20698 |
| Samsung | 20490, 20573, 21932, 21075, 20820 |
| Sansui | 20695 |
| Sanyo | 20695 |
| Sharp | 20630, 20752 |
| Sharper Image | 21117 |
| Sherwood | 20770 |
| Shinco | 20717 |
| Shinsonic | 20533 |
| Sonic Blue | 20869, 21099 |
| Sony | 20533, 20864, 21033, 21904, 21903 |
| SVA | 20717 |
| Sylvania | 20675 |
| Symphonic | 20675 |

## Manufacturer's Codes

### DVD Players

| Manufacturer | Codes |
|---|---|
| Teac | 20717, 21984, 20809 |
| Technics | 20490 |
| Theta Digital | 20571 |
| Toshiba | 20503, 20695 |
| Urban Concepts | 20503 |
| Xbox | 20522 |
| Yamaha | 20490, 20539, 20545 |
| Zenith | 20503, 20591, 20869 |

### Satellite Receivers

| Manufacturer | Codes |
|---|---|
| AlphaStar | 00772 |
| Chaparral | 00216 |
| Crossdigital | 01109 |
| DirecTV | 00392, 00566, 00639, 01142, 00247, 00749, 01749, 00724, 00819, 01856, 01076, 01109, 00099, 01392, 01640, 01442, 01414, 01108 |
| Dish Network System | 01005, 00775, 01505 |
| Dishpro | 01005, 00775, 01505 |
| Echostar | 01005, 00775, 01505 |
| Expressvu | 00775 |
| GE | 00566 |
| General Instrument | 00869 |
| GOI | 00775 |
| Goodmans | 01246 |
| Hisense | 01535 |
| Hitachi | 00819, 00222, 01250 |
| HTS | 00775 |
| Hughes Network Systems | 01142, 00749, 01749, 01442 |
| I-Lo | 01535 |
| JVC | 00775 |
| LG | 01414, 01226 |
| Magnavox | 00724, 00722 |
| Memorex | 00724 |
| Mitsubishi | 00749 |
| Motorola | 00869 |
| NEC | 01270 |
| Next Level | 00869 |
| Panasonic | 00247, 00701 |
| Paysat | 00724 |
| Philips | 01142, 00749, 01749, 00724, 01076, 00722, 00099, 01442 |
| Proscan | 00392, 00566 |
| Proton | 01535 |

## Manufacturer's Codes

### Satellite Receivers

| Manufacturer | Codes |
|---|---|
| RadioShack | 00869 |
| RCA | 00392, 00566, 00855, 00143, 01392 |
| Samsung | 01276, 01109, 01108 |
| Sanyo | 01219 |
| SKY | 00856 |
| Sony | 00639, 01640 |
| Star Choice | 00869 |
| Tivo | 01142, 01442 |
| Toshiba | 00749, 01749, 00790, 01285 |
| UltimateTV | 01640, 01392 |
| Uniden | 00724, 00722 |
| US Digital | 01535 |
| USDTV | 01535 |
| Voom | 00869 |
| Zenith | 00856, 01856 |

### VCRs

| Manufacturer | Codes |
|---|---|
| ABS | 21972 |
| Admiral | 20048, 20209 |
| Aiko | 20278 |
| Aiwa | 20037, 20479 |
| Alienware | 21972 |
| America Action | 20278 |
| American High | 20035 |
| Amoisonic | 20479 |
| Anam | 20162, 20037, 20240, 20278 |
| Anam National | 20162 |
| Asha | 20240 |
| Audiovox | 20037, 20278 |
| Beaumark | 20240 |
| Bell & Howell | 20104 |
| Broksonic | 20184, 20121, 20209, 20002, 20479 |
| Calix | 20037 |
| Canon | 20035 |
| Carver | 20081 |
| CCE | 20072, 20278 |
| Changhong | 20048, 20081 |
| Citizen | 20037, 20278 |
| Colt | 20072 |
| Craig | 20037, 20047, 20240, 20072 |
| Curtis Mathes | 20060, 20035, 20162 |
| Cybernex | 20240 |
| CyberPower | 21972 |

## Manufacturer's Codes

### VCRs

| Manufacturer | Codes |
|---|---|
| Daewoo | 20045, 20104, 20278 |
| Dell | 21972 |
| Denon | 20042 |
| DirecTV | 20739 |
| Durabrand | 20039, 20038 |
| Electrohome | 20037 |
| Electrophonic | 20037 |
| Emerex | 20032 |
| Emerson | 20035, 20037, 20184, 20240, 20045, 20121, 20043, 20209, 20002, 20278, 20479 |
| Fisher | 20047, 20104 |
| Fuji | 20035, 20033 |
| Fujitsu | 20045 |
| Gateway | 21972 |
| GE | 20060, 20035, 20240 |
| General | 20045 |
| Go Video | 20432 |
| GoldStar | 20037, 20209, 20038, 20225 |
| Haojie | 20240 |
| Harman/Kardon | 20081, 20038 |
| Harwood | 20072 |
| Hewlett Packard | 21972 |
| HI-Q | 20047 |
| Hitachi | 20037, 20042, 20055 |
| Howard Computers | 21972 |
| HP | 21972 |
| Hughes Network Systems | 20042, 20739 |
| iBUYPOWER | 21972 |
| JVC | 20045, 20067 |
| KEC | 20037, 20278 |
| Kenwood | 20067, 20038 |
| KLH | 20072 |
| Kodak | 20035, 20037 |
| Kolin | 20043 |
| LG | 20037, 20045, 20042, 20209, 20038 |
| Logik | 20072 |
| LXI | 20037 |
| Magnavox | 20035, 20039, 20081 |
| Magnin | 20240 |
| Marantz | 20035, 20081 |
| Marta | 20037 |

## Manufacturer's Codes

### VCRs

| Manufacturer | Codes |
|---|---|
| Matsushita | 20035, 20162 |
| Media Center PC | 21972 |
| MEI | 20035 |
| Memorex | 20035, 20162, 20037, 20048, 20039, 20047, 20240, 20104, 20209, 20479 |
| MGA | 20240, 20043 |
| MGN Technology | 20240 |
| Microsoft | 21972 |
| Mind | 21972 |
| Minolta | 20042 |
| Mitsubishi | 20067, 20043 |
| Motorola | 20035, 20048 |
| MTC | 20240 |
| Multitech | 20072 |
| NEC | 20035, 20037, 20048, 20104, 20067, 20038 |
| Newave | 20037 |
| Nikko | 20037 |
| Noblex | 20240 |
| Northgate | 21972 |
| Olympus | 20035 |
| Optimus | 21062, 20162, 20037, 20048, 20104, 20432 |
| Orion | 20184, 20209, 20002, 20479 |
| Panasonic | 21062, 20035, 20162, 20616, 20225 |
| Penney | 20035, 20037, 20240, 20042, 20038 |
| Pentax | 20042 |
| Philco | 20035, 20479 |
| Philips | 20035, 20081, 20739, 20618 |
| Pilot | 20037 |
| Pioneer | 20042, 20067 |
| Polk Audio | 20081 |
| Profitronic | 20240 |
| Proscan | 20060 |
| Protec | 20072 |
| Pulsar | 20039 |
| Qisheng | 20060 |
| Quasar | 20035, 20162 |
| Radix | 20037 |
| Randex | 20037 |
| RCA | 20060, 20035, 20240, 20042, 20880 |
| Realistic | 20035, 20037, 20048, 20047, 20104 |
| ReplayTV | 20616 |
| Runco | 20039 |
| Sampo | 20037, 20048 |

## Manufacturer's Codes

### VCRs

| Manufacturer | Codes |
|---|---|
| Samsung | 20240, 20045, 20432 |
| Sanky | 20048, 20039 |
| Sansui | 20067, 20209, 20479 |
| Sanyo | 20047, 20240, 20104 |
| Scott | 20184, 20045, 20121, 20043 |
| Sears | 20035, 20037, 20047, 20042, 20104 |
| Sharp | 20048, 20209 |
| Shintom | 20072 |
| Shogun | 20240 |
| Singer | 20072 |
| Sonic Blue | 20616 |
| Sony | 20035, 20032, 20033, 20636, 21972 |
| STS | 20042 |
| Sylvania | 20035, 20081, 20043 |
| Systemax | 21972 |
| Tagar Systems | 21972 |
| Tashiko | 20037 |
| Tatung | 20045, 20067 |
| Technics | 20035, 20162 |
| Teco | 20035, 20037, 20048, 20038 |
| Teknika | 20035, 20037 |
| Tivo | 20636, 20618, 21503, 20739 |
| TMK | 20240 |
| Toshiba | 20045, 20042, 20067, 20043, 21503, 21008, 21972 |
| Totevision | 20037, 20240 |
| Touch | 21972 |
| Unitech | 20240 |
| Vector | 20045 |
| Vector Research | 20038 |
| Victor | 20067 |
| Video Concepts | 20045 |
| Videomagic | 20037 |
| Videosonic | 20240 |
| Viewsonic | 21972 |
| Wards | 20060, 20035, 20048, 20047, 20081, 20240, 20042, 20072 |
| White Westinghouse | 20209, 20072 |
| XR-1000 | 20035, 20072 |
| Yamaha | 20038 |
| Zenith | 20039, 20033, 20209, 20479 |
| ZT Group | 21972 |